93000 & 94000 Super Vac

Installation/Operations Manual

COLEMAN HANNA CARWASH SYSTEMS LLC

AN O'HANRAHAN COLEMAN COMPANY

5842 W 34th St • Houston, TX 77092

1.800.999.9878 1.713.683.9878

www.colemanhanna.com

Find us on Facebook: /ColemanHannaCarwash

COPYRIGHTS AND DISCLAIMERS

The **93000** and **94000** Vacuums are completely developed and designed by the Coleman Hanna Carwash Systems. Any un-authorized use of it is strictly forbidden without written permission from the Coleman Hanna Carwash Systems. No alteration of their systems or operating procedures is allowed. For more information concerning this system contact:

Coleman Hanna Carwash Systems
5842 West 34th
Houston, Texas 77092
Tel: (713) 683-9878
Toll Free: (800) 999-9878
Fax: (713) 683-9624
E-Mail:info@jcolemanco.com
Website: www.colemanhanna.com

TABLE OF CONTENTS

1. EQUIPMENT PLANNING AND ARRANGEMENT 4

2. SAFETY INSTRUCTIONS 5

3. INSTALLATION GUIDELINES 6

4. THEORY OF OPERATION 6

5. MAINTENANCE 7

6. EQUIPMENT PROGRAMMING 8

6.1 Initial Setup of New Timers 8
6.2 Menus 8
6.3 Programming the Timer 9
6.4 Accessing Timer Functions 10
6.5 Programming Via the hand-held Remote Controller 11
Example of Typical Set-up 11

7. TROUBLESHOOTING 17

8. DIAGRAMS/TECHNICAL INFORMATION 19

9. PARTS LIST 24

1. EQUIPMENT PLANNING AND ARRANGEMENT

1.1 Unpacking The Equipment

Before any operation can be carried out there must be a time of planning. This is no different for the installation of the **93000/94000**. Carefully plan the **93000/94000** layout and setup before starting the installation process.

Thoroughly inspect each component for visible damage. Uncrate the equipment **only if there is no damage**.

> **NOTE: Carefully inspect and evaluate the freight upon arrival. If there is damage to any boxes or crates immediately report it to the freight carrier.**

1.2 Using Suggested Installation Procedures

This manual contains suggested installation guidelines. (Section 3)

Completely read through this manual **prior** to beginning installation. This will ensure a proper understanding of the system and its installation procedures.

The installation of this equipment involves high and low voltage electrical connections. Only qualified and trained personnel should be used in it's hook-up.

This equipment's circuit protection is located in the main electrical panel of the building supplying power to this device. Insure that this protection is in place and rated according to the guidelines set forth on the equipment not to exceed 15 amps.

2. SAFETY INSTRUCTIONS

Extreme caution should be exercised when working with high voltage and the operation of this equipment.

Do not throw away these important safety instructions. The instructions pertain to risk of fire, electrical shock, and/or injury to persons.

- Read all instructions before using this product.
- STAY ALERT- Always give complete attention to your actions.
- Do not operate this product when fatigued or under the influence of alcohol or drugs.
- Keep operation area clear of all persons.
- Do not attempt to reach over equipment or stand on any unstable support. Keep good footing and balance at all times.
- Disconnect all power before installing or servicing this equipment. If the power disconnects are out of sight, lock it in the open position and tag it to prevent unexpected application of power. Failure to do so could result in fatal electrical shock.
- A qualified electrician should install all wiring according to local, state, and federal electrical codes.

3. INSTALLATION GUIDELINES

- Remove hoses and Owners Manual from Dirt Receptacle.
- Remove stainless steel shroud from under meter to expose 110V cord.
- Unbolt vacuum from wooden crate (save rubber washers on 93000 unit).
- Set vacuum cleaner on cardboard and make a template or pattern by cutting out cardboard in shape of vacuum cleaner.
- Take template and set on vacuum base and mark holes for bolts.
- Drill holes in concrete using an 1/2 drill bit.
- Blow out all concrete dust from holes.
- Set vacuum cleaner over holes and hammer in Anchor Bolts. Use ½" x 5½" for 93000 Oval Vacuum and ½" x 3¾" for 94000 Round Vacuum.
- Make sure you install rubber washer between metal washer and vacuum canister to provide air-tight seal on 93000 unit.
- Plug vacuum in to the cord under the shroud.
- Install stainless steel shroud back in place.
- Open up Vacuum Cabinet with keys provided with Owner's Manual.
- Turn on the power to the vacuum cleaner and install a sample coin in the Sensortron.
- Refer to Price and Time Setting Sheet to properly set price and time on timer. Unit is preset to price on decals and normal time.
- Drop coins into coin acceptor, check vacuum for proper suction and install vacuum hose.

4. THEORY OF OPERATION

- Coins are deposited into coin acceptor.
- Coin acceptor sends out a 24V pulse to the timer.
- The timer reads the 24V pulse and compares that to the turn on price programmed into it.
- Once the proper amount of coins are deposited the timer turns on the 24V Mercury Relay.
- The Mercury Relay sends power to the vacuum motors.
- The vacuum motors start to run which draws air through the filter bags and vacuum hose.

5. MAINTENANCE

Weekly
• Clean out plastic dirt canister.
• Clean vacuum bags with brush.
• Clean stainless steel door, and check gasket for leaks.
• Wash vacuum hose inside and out.
• Wipe down outside of vacuum canister with damp cloth.

Every Six Months
• Remove vacuum dome and wash thoroughly.
• Clean fluorescent lamps with damp towel.
• Check brushes in vacuum motor for wear, and replace as needed.
• Wash filter bags.
• Wash out bottom dirt canister and dirt funnel.

6. EQUIPMENT PROGRAMMING

There are two buttons located on the back of the timer that are used for setting the price and time, as well as retrieving information.

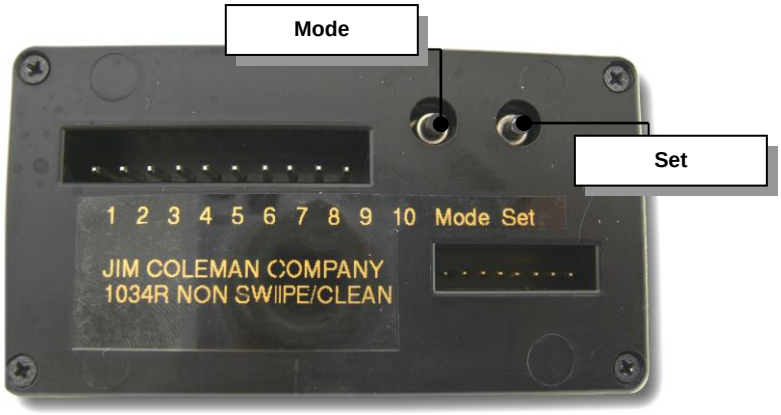

6.1 Initial Setup of New Timers

When you first receive your timer and power it up, the display will be flashing zeros. This indicates that the timer needs to be programmed to function properly. The following menus indicate the information that will need to be input to make the timer function properly.

6.2 Menus

Let's start by explaining the purpose of each menu.

MENUS FOR VACUUM	
Menu	***Valid Entries***
A. Number of Coins to Start Vacuum	Valid entries are from 1 to 20 coins to start the vacuum
B. Number of Seconds per Vacuum	This menu creates some confusion for customers. TYPICALLY THIS NUMBER IS LEFT AT ZERO. The menu is in place for those customers who have a wash that starts at 3:30, for example. In this case, you would enter the :30 at this point. Valid entries are from :00 to :59.
C. Number of Minutes Per Vacuum	Valid entries are from 0 to 9.
D. Number of Times Warning Horn Beeps	This is the number of times the user would like the warning horn to sound at the one-minute mark. Valid entries are from :00 to :59. If the menu is left at :00, the warning horn is disabled.
H. Amount of Time per Coin After the Start-Up Price is Satisfied.	This is the amount of time that the customer will receive for each additional coin deposited after the initial turn-on price is deposited.

MENUS FOR FRAGRANCE (Not Used)	
Menu	***Valid Entries***
When the "H" menu is complete, press the **mode** switch. Menus "A" - "H" will repeat, allowing you to enter the fragrance information.	
A. Number of Coins to Start Fragran	Valid entries are from 1 to 20 coins to start the vacuum/fragrance machine
B. Number of Seconds per Fragranc	This menu creates some confusion for customers. TYPICALLY THIS NUMBER IS LEFT AT ZERO. The menu is in place for those customers who have a wash that starts at 3:30, for example. In this case, you would enter the :30 at this point. Valid entries are from :00 to :59.
C. Number of Minutes Per Fragrance	Valid entries are from 0 to 9.
D. Number of Times Warning Horn Beeps	This is the number of times the user would like the warning horn to sound at the one-minute mark. Valid entries are from :00 to :59. If the menu is left at :00, the warning horn is disabled.
H. Amount of Time per Coin After the Start-Up Price is Satisfied.	This is the amount of time that the customer will receive for each additional coin deposited after the initial turn-on price is deposited.
E. Four-digit PIN Code	This menu is used to input the Personal Identification Number. This number is used to access the timer via the hand-held remote control.
F: Vacuum Test Time	This function sets the amount of time the user can test the vacuum by using the "TEST" feature on the remote control. Valid entries are from 0:00 to 9:00. If the unit is set to 0:00, this feature is disabled.

NOTE: The Vacuum/Fragrance Timer is used in a vacuum only to reduce the amount of spare parts that are needed by the operator. Therefore, a vacuum/fragrance timer will work in all regular vacuums as well as the fragrance vacuums.

6.3 Programming the Timer

Let's walk through the programming of the timer, step by step.

- Begin by pressing the mode switch and holding down for five (5) seconds. The display will now show the "A" menu.
- Now press the set switch until you reach the number of coins it takes to start your vacuum. (Don't worry if you accidentally go past your number; the timer "wraps around" when you exceed 20.) Also, note that anytime you press and hold the set switch, the display increments at 1/2 second increments.

6.3.1 Vacuum

- Once you have the proper number displayed on the "A" menu press the mode switch and release it. This display will now show the "B" menu.
- Now, using the set switch input the number of seconds, if any, that you have in your initial vacuum cycle.
- Press the mode switch and the display will show the "C" menu. Using the set switch, enter the number of minutes you have in your initial vacuum cycle.
- Press the mode switch and the "D" menu appears. Using the set switch, enter the number of seconds that you want the warning horn to sound at the one-minute mark when a customer is using the vacuum.

- Press the mode switch and the “H” menu appears. Using the set switch, enter the amount of time that the customer should receive upon depositing additional coins after the vacuum turn-on price has been satisfied.

6.3.2 Fragrance (Not Used)

- At this point, menus “A” - “H”, above, will repeat, allowing you to input the correct fragrance information.
- Press the mode switch and the “A” menu appears, again. This time, use the set switch to input the number of coins it takes to start your fragrance machine.
- Press the mode switch and the “B” menu appears. Now, using the set switch, input the number of seconds, if any, that you have in your initial fragrance cycle.
- Press the mode switch and the display will show the “C” menu. Using the set switch, enter the number of minutes you have in your initial fragrance cycle.
- Press the mode switch and the “D” menu appears. Using the set switch, enter the number of seconds that you want the warning horn to sound at the one-minute mark when a customer is using the fragrance machine.
- Press the mode switch and the “H” menu appears. Using the set switch, enter the amount of time that the customer should receive upon depositing additional coins after the fragrance turn-on price has been satisfied.
- Press the mode switch and the “E” menu appears. Press the switch until the first digit of the PIN code you have selected appears. Continue pressing the mode and set switches to enter each individual digit of the four-digit PIN code you have selected.
- Press the mode switch and the “F” menu appears. Using the set switch, enter the number of minutes that the timer will run while testing the vacuum, using the hand-held remote control.
- Now, press the mode switch one final time and the timer will display the $.00 and add up as coins are deposited.

Congratulations! You’re finished programming!

6.4 Accessing Timer Functions

6.4.1 Resettable Coin Counter

- Once the timer is set up you can access the coin-count function via the **set** switch. By pressing and releasing the **set** switch, the timer will display the number of coins that have been input for two seconds. Next, the timer will display the number of vacuum cycles for two seconds, then the number of fragrance cycles for two seconds. If you hold the **set** switch engaged for five seconds, the timer will zero this amount.

6.4.2 Modifying Existing Programs

- To modify existing programs, press and hold the mode switch until the timer begins flashing zeros. Now release the mode switch and the timer will return to the “A” Menu for set up. The timer “remembers” the previously programmed values. This is helpful if you are only changing one portion of the program. By repeatedly pressing the mode switch, you are able to step through the menus until you reach the item you wish to modify.

6.5 Programming Via the hand-held Remote Controller

6.5.1 Modifying Existing Programs

NOTE: The timer must be set up using the mode and set switches on the back of the timer before the remote control will function.

- To use the remote control, point the remote directly at the front of the timer within a two-foot range.
- Slowly input the Pin code by pressing the appropriate number on the key pad.
- After the proper code has been set into the timer the warning horn will beep for a half-second. This indicates that the proper code has been input and the time is waiting for further instructions.

Three important items need**ed to be addressed at this point:**

- Once the four-digit Pin has been entered and the timer beeps, if no further command is received for seven seconds, the timer automatically reverts back to normal operation. You will now have to input your Pin code once again to access your timer. This prevents you from inputting your code and inadvertently walking away, leaving the timer disabled.
- While the timer is being accessed by remote control it will not accept coins or tokens.
- Only “A”, “B”, “C”, “D” and “H” may be accessed using the remote control. This gives the owner more security over improper use of the remote control by an attendant.

Once the **Pin** code has been entered, and before seven seconds has elapsed, you can do any of the following:

- Modify Setup Parameters: Access the feature by pressing the mode switch on the remote. Now the setup is similar to the setup using the mode and set switches during initial programming. The difference is the remote control has an up/down feature for the set switch. This allows you to rapidly increment or decrement a setting.
- Obtain Quarter Count: Press the Coin button to obtain a coin readout of the number that has been dropped. If you hold this button for five (5) seconds the number will zero.
- Obtain Test Count: Press the Test Cycles button to obtain the number of times an attendant has used the test feature. This feature is non-resettable.
- Use Test Feature: Press the Test button and the timed output from the timer turns on the vacuum. The display indicates “Test” to remind you that the timer is in the test mode. You may press Cncl to cancel this time if you are finished early. Otherwise, the timer will “time out” after the amount of time you have set in the “F” menu during the initial programming.

Example of Typical Set-up

- I have a vacuum/fragrance machine that requires $1.00 to start the vacuum and $1.00 to start the fragrance machine.
- The vacuum cycle lasts for a period of four minutes, while the fragrance cycle lasts for forty-five seconds.

- At the one-minute mark I want to alert my customer, with five (5) beeps, that time is about to run out.
- A customer depositing additional coins while using the vacuum will receive one minute of time for each coin deposited.
- A customer depositing additional coins while using the fragrance machine will receive eleven seconds for each coin deposited.
- I have chosen 3459 as my Personal Identification Number (Pin).
- I know that it takes me about three minutes to test my vacuum fragrance machine.

The following is how I would set up my timer based on the previous information:

Menu Entry	Description
A:04	Coins Required to Turn on Vacuum
B :00	Seconds Vacuum Cycle will Run
C4:00	Minutes Vacuum Cycle will Run
D :05	Number of Times Warning Horn will Sound.
H1:00	Amount of Time Earned by Depositing Additional Coins
A:04	Coins Required to Turn on Fragrance Machine
B:45	Seconds Fragrance Cycle will Run
C:00	Minutes Fragrance Cycle will Run
D:05	Number of Times Warning Horn will Sound
H:11	Amount of Time Earned by Depositing Additional Coins
3EEE 34EE 345E 3459	Personal Identification Number (PIN#)
F3:00	Time the Test Function Runs for.

Congratulations! Your timer is now set up and ready for operation.

6.5.2 Bay Programming

- Depress mode button until the following words appear: BAY, VAC, FRAG, SHAM, FVAC, SVAC. Use the set button to select BAY for desired function programming.
- If you intend to use the timer in a bay press the mode again and you will see the word DOM (Domestic-US) or INTR (International). Press set to select nationality.
- Press mode again. “T” will appear allowing you to program “Token” setting.
  - If you are using a separate coin acceptor for tokens only use **set** to program token value.
  - If you are not using a separate coin acceptor for tokens disregard this setting.

- Depress mode again. “A” will appear allowing you to program “Turn-On Price” (i.e. $1.00 to start) using set button. Each time it is pressed and released it advances $0.25 up to $5.00 for turn-on.
- Depress mode again. “B” will appear allowing you to program “Time” (i.e. Base time 4:00 minutes). Using set button program time starting with minutes. When total minutes are set, use mode button to advance to seconds :00. Press mode button to advance to next digit :00
- Press mode again “C” appears allowing you to program bonus time or time received for additional quarters. A $1.00 for 4:00 minutes additional quarter equal 1:00 minute – using mode will advance 1 digit at a time.
- Press mode again “H’ allowing you to program horn setting. Use set button to advance one # at a time. Ten is a good number for this.
- Depress mode and “W” will appear allowing you to program “Wash Down Time” when using remote. Use mode to advance 1 digit at a time. If not using Commander Remote C-1000 disregard this setting.
- Program User Password. Program “pin #” with set button. Move to next digit with mode button.
- Program Supervisor Password – program “Supervisor Password” with set button. Move to next digit with mode button.
- Timer is now programmed for In-Bay use.

6.5.3 Vacuum Programming

- Press mode button until the following words appear: BAY, VAC, FRAG, SHAM, FVAC, SVAC. Use set button to select “VAC” for desired function programming.
- If you intend to use the timer in a VAC – press mode again and you will see the word DOM (Domestic-US) or INTR (International). Press set button to select nationality.
- Press mode again “T” will appear allowing you to program “Token” setting.
    - If you are using a separate coin acceptor for tokens – use **set** button to program token value.
    - If you are not using a separate coin acceptor for tokens, disregard this setting.
- Depress mode again “A” will appear – allowing you to program “Turn-On Price” (i.e. $1.00 to start) using set button each time it is pressed and released it advances $0.25 up to $5.00 for turn-on.
- Depress mode again “B” will appear allowing you to program “Time” (i.e. Base time 4:00 minutes) Using set button program time starting with minutes. When total minutes are set, use mode button to advance to seconds :00. Press mode button to advance to next digit :00
- Press mode again “C” appears allowing you to program bonus time or time received for additional quarters. A $1.00 for 4:00 minutes additional quarter equal 1:00 minute – using mode will advance 1 digit at a time.
- Press mode again “H’ allowing you to program horn setting. Use set button to advance one # at a time. Ten is a good number for this.
- Depress mode “W” will appear allowing you to program “VAC Run Time” when using remote. Use mode to advance 1 digit at a time. If not using Commander Remote C-1000 disregard this setting.

- Program User Password. Program "pin #" with set button move to next digit with mode button.
- Program Supervisor Password with set button. Move to next digit with mode button.
- Timer is now programmed for vacuum use.

6.5.4 Fragrance and Fragrance/Vac Programming

Depress **mode** button until one of the following words appear: FRAG, FVAC, Use "SET" button to select desired function for programming.

- Press Mode again – you will see the word DOM (Domestic-US) or INTR (International) – Depress "Set" button to select Nationality.
- Press Mode again "T" will appear allowing you to program "Token" setting.
  - If you are using a separate coin acceptor for tokens – use set button to program token value.
  - If you are not using tokens – disregard this setting.
- Depress mode again "A" will appear – allowing you to program "Turn-On Price" (i.e. $1.00 to start) using set button each time it is pressed and released it advances $0.25 up to $5.00 for turn-on.
- Depress mode again "B" will appear allowing you to program "Time" (i.e. Base time 4:00 minutes) Using set button program time starting with minutes. When total minutes are set, use mode button to advance to seconds :00. Press mode button to advance to next digit :00
- Press mode again "C" appears allowing you to program bonus time or time received for additional quarters. A $1.00 for 4:00 minutes additional quarter equal 1:00 minute – using mode will advance 1 digit at a time.
- Press mode again – the words "Switched" or "Non-Switched" will appear. Select "SET" to selected desired mode.
- Press mode again "S" will appear allowing you to program switch time. *"Switched/Non-Switched". Switched if you are using fragrance that cost less than vacuum and you select vacuum, the timer will require additional money be deposited and switched time is the time allowed to make additional deposit or timer reverts to fragrance and times out.* (i.e. time 30 seconds) Using set button program time starting with minutes. When total minutes are set, use mode button to advance to seconds :00. Press mode button to advance to next digit :00.

A	$1.00	D	$0.75
B	4:00	E	0:45
C	1:00	F	0:15

- Depress mode again "D" will appear – allowing you to program "Secondary Base Cost" (i.e. $1.00 to start) using set button each time it is pressed and released it advances $0.25 up to $5.00 for turn-on.
- Press mode again "E" appears allowing you to program secondary base time or time received for additional quarters. A $1.00 for 4:00 minutes additional quarter equal 1:00 minute – using mode will advance 1 digit at a time.
- Press mode again "H' will appear allowing you to program horn setting. Use set button to advance one # at a time. Ten is a good number for this.

- Depress mode – “W” will appear allowing you to program “Vac Run Time” when using remote. Use mode to advance 1 digit at a time. *If not using Commander Remote C-1000 disregard this setting.*
- Program User Password. Program “PIN #” with Set Button move to next digit with mode button.
- Program Supervisor Password – program “Supervisor Password” with Set Button – move to next digit with mode button.
- Timer is now programmed for use in the fragrance or fragrance/vac unit.

6.5.5 Shampooer and Shampoo/Vac Programming

- Depress Mode Button until one of the following words appear: SHAMP, SVAC, Use “SET” button to select desired function for programming.
- Press mode again - the word DOM (Domestic-US) or INTR (International) – Depress “Set” button to select Nationality.
- Press Mode again “T” will appear allowing you to program “Token” setting.
- If you are using a separate coin acceptor for tokens – use set button to program token value.
- If you are not using tokens – disregard this setting.
- Depress mode again “A” will appear – allowing you to program “Turn-On Price” (i.e. $1.00 to start) using set button each time it is pressed and released it advances $0.25 up to $5.00 for turn-on.
- Depress mode again “B” will appear allowing you to program “Time” (i.e. Base time 4:00 minutes) Using set button program time starting with minutes. When total minutes are set, use mode button to advance to seconds :00. Press mode button to advance to next digit :00
- Press mode again “C” appears allowing you to program bonus time or time received for additional quarters. A $1.00 for 4:00 minutes additional quarter equal 1:00 minute – using mode will advance 1 digit at a time.
- Press mode again – the words “Switched” or “Non-Switched” will appear. Select “SET” to selected desired mode.
- Press mode again “S” will appear allowing you to program switch time. “Switched/Non-Switched”. Switched if you are using shampoo that cost less than vacuum and you select vacuum, the timer will require additional money be deposited and switched time is the time allowed to make additional deposit or timer reverts to shampoo and times out. (i.e. time 30 seconds) Using set button program time starting with minutes. When total minutes are set, use mode button to advance to seconds :00. Press mode button to advance to next digit :00.
- Depress mode again “D” will appear – allowing you to program “Secondary Base Cost” (i.e. $1.00 to start) using set button each time it is pressed and released it advances $0.25 up to $5.00 for turn-on.
- Press mode again “E” appears allowing you to program secondary base time or time received for additional quarters. A $1.00 for 4:00 minutes additional quarter equal 1:00 minute – using mode will advance 1 digit at a time.
- Press mode again “H’ will appear allowing you to program horn setting. Use set button to advance one # at a time. Ten is a good number for this.

- Press mode again "I' will appear allowing you to program number of Blow Out Cycles. Use set button to advance one # at a time. 4 is a good number for this.
- Press mode again "J' will appear allowing you to program length of Blow Out. (i.e. time 4:00 minutes) Using set button program time starting with minutes. When total minutes are set, use mode button to advance to seconds :00. Press mode button to advance to next digit :00.
- Press mode again "K' will appear allowing you to program time between Blow Out. (i.e. time 2:00 minutes) Using set button program time starting with minutes. When total minutes are set, use mode button to advance to seconds :00. Press mode button to advance to next digit :00.
- Depress mode – "W" will appear allowing you to program "Run Time" when using remote. Use mode to advance 1 digit at a time. *If not using Commander Remote C-1000 disregard this setting.*
- Program User Password. Program "PIN #" with Set Button move to next digit with mode button.
- Program Supervisor Password – program "Supervisor Password" with Set Button – move to next digit with mode button.
- Timer is now programmed for use in the shampooer or shampoo/vac unit.

6.5.6 Vacuum Programming Summary Table

	Bay	Vac	Frag	Sham	
Unit Type	X	X	X	X	Bay (*Bay Timer*), Vac (*Vacuum Timer*), Frag (*Fragrance Unit-Pole Mount/Stand-Alone Unit*), Sham (Shampoo *Unit-Pole Mount/Stand-Alone Unit)*, Fvac (*Combo Fragrance/Vacuum Unit*), Svac *(Combo Shampoo/Vacuum Unit*),
Nationality	X	X	X	X	Domestic, International
T	X	X	X	X	Token Value in Number of Quarters
A	X	X	X	X	Base Cost
B	X	X	X	X	Base Time
C	X	X	X	X	Bonus Time
Switched			X	X	Switched, Non Switched
S			X	X	Switch Time
D			X	X	Secondary Base Cost
E			X	X	Secondary Base Time
F			X	X	Secondary Bonus Time
H	X	X	X	X	Number of Horn Beeps at 60 Seconds
I				X	Number of Blow Out Cycles
J				X	Length of Blow Out
K				X	Time Between Blow Out
W	X	X	X	X	Wash Down Time (Bay) or Vac Run Time (Vacuum)
User Password	X	X	X	X	4 Digit Password
Supervisor Password	X	X	X	X	4 Digit Password

6.5.7 1034R Timer Wiring Table

1:	Not Used	
2:	Quarter Input	Orange/Black
3:	Horn (-)	Green/Black
4:	Horn (+)	Red/Black
5:	Safety Ground	Lime
6:	24 V Timed Output to Switch	Blue/Black
7.	**Token Input**	**Red/Yellow**
8.	Not Used	
9:	24V Common	Green
10:	24V Hot	Orange

7. TROUBLESHOOTING

NOTE: In order to troubleshoot Coleman Hanna Carwash Systems equipment it helps to have knowledge on how the equipment is supposed to operate properly. Please read the following carefully.

PROBLEM	POSSIBLE SOLUTIONS
"No Display - Will Not Accept Money - Nothing Works"	• Vac requires 110V to operate. Check to be sure that 110V are present. If voltage is not present check all breakers . If all breakers are good - call an electrician. • Check for 110V Power at Breaker inside Cabinet. • If power is found, then check for 24V coming out of Transformer (Yellow/Blue wires) • If you do not have 24V then the Transformer is bad.
No Suction THEORY: Vac Motors turn pulling air through bottom of motors creating a suction through filter bags and out hole for hose.	• Check for clogged hose - Remove hose - place hand over hole in vac - is there suction now? • If there is still no suction - check to be sure both motors are running. (Remember - when one motor runs the other motor will turn due to the passing of air). • Check screen on bottom for dust build up - if there is a build up - remove dust and replace motors. • If you still do not get results - clean filter bags (dirty filter bags will not allow air to pass through them) leaving you with little or no suction. Also, dirt doors with bad gaskets do not make a good seal leaving you with little or no suction.

Troubleshooting cont.

PROBLEM	POSSIBLE SOLUTIONS
"No LED Display" THEORY: Timer needs 24V Hot.	• Check for 110V coming in to unit - if no voltage - check for breakers. • If voltage is present - check transformer (Blue-Hot / Yellow-Neutral). • If no voltage is coming out of transformer - replace transformer. • If 24V is coming out of transformer - replace timer.
Unit Will Not Accept Coins THEORY: Sensortron needs 24V Hot to accept coins.	• Check for 24V using a voltmeter between yellow wire and black wire coming from Sensortron. If 24V is present, replace Sensortron. • If no voltage check for 24V coming out of transformer (Yellow-Neutral / Blue-Hot). • If no voltage, check for 110V coming into transformer (Black-Hot / White-Neutral). • If voltage is found replace transformer. • If no voltage check breaker on vac - if good check breaker in equipment room.
Vac Unit Will Not Run THEORY: Timer receives signal from Sensortron and sends out a signal to mercury relay allowing 110V to pass through turning on motors.	• Check for 110V on top of mercury relay. • Check vac motors for voltage. • If 110V is not present on top of mercury relay check for 110V coming into relay. • If relay has 110V, check for 24V to energize relay. • If 24V is not present check switch - if switch is good - call a service technician.

8. DIAGRAMS/TECHNICAL INFORMATION

Models MA800 & MA812

HAWK XEPTOR®

6 or 12 COINS THE SMART MULTI-COIN AND TOKEN ACCEPTORS

IDX INC

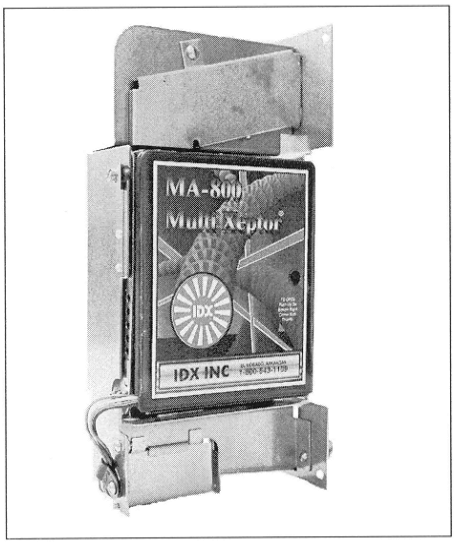

IDX Hawk Xeptors® will accept a mixture of different coins and/or tokens- MA800, 6 coins & MA812, 12 coins. The multi-national capability of the MA800 & MA812 Xeptors® makes them the ideal Xeptor® for the OEM's. The Hawk multi-coin Xeptors® do not require a separate handheld programmer to program new coins or change the number of coin pulses per coin. Coin pulses are released through a shielded relay to offer the OEM an easier interface for multiple voltage requirements. This smart thinking Xeptor® continues up date its memory on each coin as the Xeptor® ages.

Digging coin jams out is a thing of the past. The built in coin release opens the chute to drop through bent and mutilated coins. Coin jams are also caused where bent faceplates miss aliment of the Xeptors® faceplate to meter doors. This has been eliminated with the introduction of a new all stainless steel snap in faceplate model MA19 which relieves the strain from bent doors.

MA800 & MA812 XEPTOR® FEATURES:

- Standard Preprogramed with U.S. Quarter and U.S. Dollar coins can be field changed.
- Standard 4 wire hookup – Power wires –Yellow 24VAC Hot / Black 24VAC Common – Coin wires (2) Red Green.
- Power sources 24 VAC standard optional voltages – 12VDC / 24 VDC.
- Distinguishes and accepts any of up to (6) six MA800 or (12) twelve MA812 different coins or tokens of different sizes and/or electronic signatures.
- Standard 2" faceplate footprint.
- Snap in Stainless Steel faceplate MA19 standard.
- Optional old style 2" faceplate model # MA20
- Diameter range examples: 0.700"- 1.126" (17.78 mm to 28.6mm).
- Thickness range settings: 0.087" to 0.130" (Canadian Dime 1.22mm to British 1£ 3.15mm).
- Slide on water resistant access covers.
- Built-in "Credit Test" push button.
- Bent coin release.
- New coin types can be learned or programmed in the field.
- Unwanted shadow coin feature eliminates false acceptance of undesired coins.
- Multi-color indicator LED for operational status.
- Optional credit sense optics for extra security.
- Optional programmable multi-denominational diverter/driver, controls direction for presorting coins.
- Patent Coverage: U.S.#5,046,841 U.S.#6,021,882 U.K.#2,227,347 U.K.#8,929,131 U.K.#9,905,044 U.K.#2,335,207 Aus.#619,639 Aus.#1,952,499 Aus.#4,788,290 Can.#1,313,806 Jap. #9471,1990 Grm.#4,000,197 Others Pending

Mailing: 401 W. Main St., El Dorado AR 71730 -Shipping 400 W. Cedar St., El Dorado AR 71730
☎ 800-643-1109, 870-862-2051, FAX 870-862-3472 e-mail: sales@idxinc.com , web site: www.idxinc.com

Model X10

X-MARK® or SMART MARK® XEPTOR®

THE SMART MULTI-COIN AND ENCODED TOKEN ACCEPTORS

IDX INC

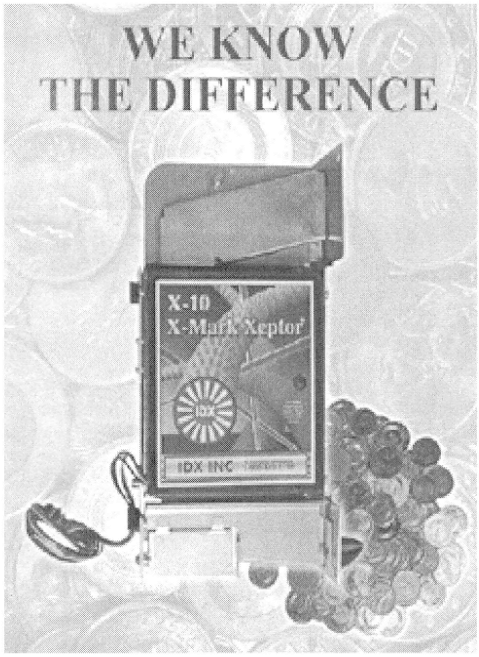

IDX's X10 series of multi-coin Xeptors® will accept a mixture of 6 different coins. This coin mixture can consist of any combination of currencies, tokens and X-Mark® or Smart Mark® encoded security tokens. The X10 Xeptors® has internal programming to allow the operator the ability to program new coins, change the number of coin pulses per coin and field self-diagnostic information. Coin pulses are released through a shielded relay to offer the OEM an easier interface for multiple coin voltage requirements. Other coin outputs are available to meet the different demands of the OEMs. This smart thinking Xeptor® continues up date its memory on each coin as the Xeptor® ages.

Digging coin jams out is a thing of the past. The built in coin release opens the chute to drop through bent and mutilated coins. Coin jams are also caused where bent faceplates are miss alignment with the Xeptors® faceplate to meter doors. This has been eliminated with the introduction of a new all stainless steel snap in faceplate model MA19 which relieves the strain from bent doors.

X10 XEPTOR® FEATURES:

- Standard Preprogrammed with U.S. Quarter and U.S. Dollar coins can be field changed.
- Standard 4 wire hookup – Power wires –Yellow 24VAC Hot / Black 24VAC Common – Coin wires (2) Red Green.
- Power sources 24 VAC standard optional voltages – 12VDC / 24 VDC.
- Distinguishes and accepts any of up to (6) six different coins, tokens, X-Mark®, or Smart Mark® encoded tokens of different sizes and/or different electronic signatures.
- Standard 2" faceplate footprint The Snap in Stainless Steel faceplate model #MA19.
- Optional old style faceplate model # MA20.
- Diameter range examples: 0.700"- 1.073" (17.8 mm to 27.3mm)/ 0.900"- 1.125" (22.8 mm to 28.6mm).
- Thickness range settings: 0.087" to 0.130" (Canadian Dime 1.22mm to British 1£ 3.15mm).
- Slide on water resistant access covers.
- Built-in "Credit Test" push button.
- Bent coin release.
- New coin types can be learned or programmed in the field.
- Unwanted shadow coin feature eliminates false acceptance of undesired coins.
- Multi-color indicator LED for operational status.
- Optional credit sense optics for extra security.
- Optional programmable multi-denominational diverter controls direction for presorting coins.
- Patent Coverage: U.S.#5,046,841 U.S.#6,021,882 U.K.#2,227,347 U.K.#8,929,131 U.K.#9,905,044 U.K.#2,335,207 Aus.#619,639 Aus.#1,952,499 Aus.#4,788,290 Can.#1,313,806 Jap. #9471,1990 Grm.#4,000,197 Others Pending

Mailing: 401 W. Main St., El Dorado AR 71730 -Shipping 400 W. Cedar St., El Dorado AR 71730
☎ 800-643-1109, 870-862-2051, FAX 870-862-3472 e-mail: sales@idxinc.com , web site: www.idxinc.com

Models MA800 & MA812

HAWK XEPTOR®

6 or 12 COINS THE SMART MULTI-COIN AND TOKEN ACCEPTORS

IDX INC

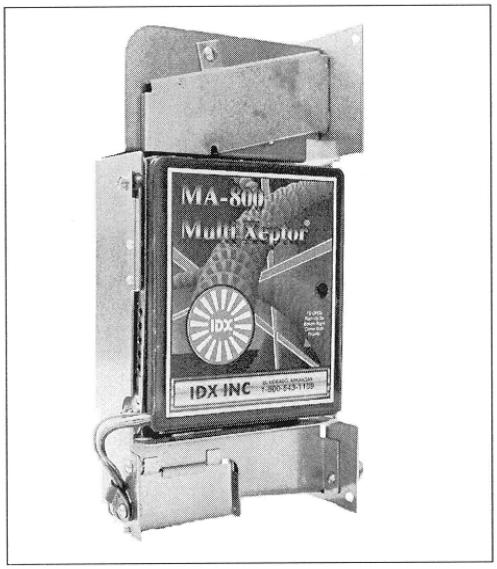

IDX Hawk Xeptors® will accept a mixture of different coins and/or tokens- MA800, 6 coins & MA812, 12 coins. The multi-national capability of the MA800 & MA812 Xeptors® makes them the ideal Xeptor® for the OEM's. The Hawk multi-coin Xeptors® do not require a separate handheld programmer to program new coins or change the number of coin pulses per coin. Coin pulses are released through a shielded relay to offer the OEM an easier interface for multiple voltage requirements. This smart thinking Xeptor® continues up date its memory on each coin as the Xeptor® ages.

Digging coin jams out is a thing of the past. The built in coin release opens the chute to drop through bent and mutilated coins. Coin jams are also caused where bent faceplates miss aliment of the Xeptors® faceplate to meter doors. This has been eliminated with the introduction of a new all stainless steel snap in faceplate model MA19 which relieves the strain from bent doors.

MA800 & MA812 XEPTOR® FEATURES:

- Standard Preprogramed with U.S. Quarter and U.S. Dollar coins can be field changed.
- Standard 4 wire hookup – Power wires –Yellow 24VAC Hot / Black 24VAC Common – Coin wires (2) Red Green.
- Power sources 24 VAC standard optional voltages – 12VDC / 24 VDC.
- Distinguishes and accepts any of up to (6) six MA800 or (12) twelve MA812 different coins or tokens of different sizes and/or electronic signatures.
- Standard 2" faceplate footprint.
- Snap in Stainless Steel faceplate MA19 standard.
- Optional old style 2" faceplate model # MA20
- Diameter range examples: 0.700"- 1.126" (17.78 mm to 28.6mm).
- Thickness range settings: 0.087" to 0.130" (Canadian Dime 1.22mm to British 1£ 3.15mm).
- Slide on water resistant access covers.
- Built-in "Credit Test" push button.
- Bent coin release.
- New coin types can be learned or programmed in the field.
- Unwanted shadow coin feature eliminates false acceptance of undesired coins.
- Multi-color indicator LED for operational status.
- Optional credit sense optics for extra security.
- Optional programmable multi-denominational diverter/driver, controls direction for presorting coins.
- Patent Coverage: U.S.#5,046,841 U.S.#6,021,882 U.K.#2,227,347 U.K.#8,929,131 U.K.#9,905,044 U.K.#2,335,207 Aus.#619,639 Aus.#1,952,499 Aus.#4,788,290 Can.#1,313,806 Jap. #9471,1990 Grm.#4,000,197 Others Pending

Mailing: 401 W. Main St., El Dorado AR 71730 -Shipping 400 W. Cedar St., El Dorado AR 71730
☎ 800-643-1109, 870-862-2051, FAX 870-862-3472 e-mail: sales@idxinc.com , web site: www.idxinc.com

Models MA800/MA803/MA812/X10/X10CM Coin Learn & Field Test Procedure

IDX INC

COIN LEARN PROCEDURE

1. Slide the front cover up and identify the three controls to be used in this procedure:
   - Black or Red push button near center bottom. (used to input the number of credit pulses)
   - 16 position rotary switch to the right of the push-button. (#0 is normal RUN position, #1-#6 are for learning each of 6 possible coin types that can be accepted) **MA812 (**#0 is normal RUN position, #1-#9 and #A, #B,#C are for learning each of 12 possible coin types that can be accepted)
   - LED indicator half way up on the right side. (Green in RUN mode, red in LEARN mode)
2. Turn the rotary switch to one of the LEARN positions #1-#6 or #1-#C (for example, pick #3 for learning the 3rd coin type) and observe the LED turns red to indicate it is now ready to learn.
3. Push the black or red button once for each credit pulse you wish to have issued for this coin. For example, a $1 coin would require 4 credit pulses if you are also accepting $0.25 coins, one credit pulse per quarter.
4. **Slide the cover back on the unit to make sure outside light does not interfere with the sensors**.
5. Show the unit **6 different samples** of the coin by depositing them into the acceptor as usual. It is best to use 6 different coins since there are typically slight variations from coin-to-coin.
6 After the 6th sample coin is deposited, the LED will flash red-green a few times to indicate the LEARN procedure is complete and the coin parameters are stored in memory.
7. Slide the front cover open again and turn the rotary switch back to position #0 and observe the LED turning green. Check that you have not accidentally turned it too far to position #15 which is a field test function position, in which it will not accept coins.
8. Slide the front cover back down and you should now be able to accept the new coin.

UNWANTED COIN FEATURE

1. Use the same coin learn procedures as above.
2. THE COIN YOU DO NOT WANT TO ACCEPT MUST BE LEARNED IN COIN POSITION #1. Turn to position #1 and press the test button 13 times, **drop the same sample coin through that you do not want to accept 6 times**. NEXT LEARN THE COIN YOU WANT TO ACCEPT IN COIN POISITION #2. Turn to position #2 and press the test button for the number of times for the value of your coin to be accepted, **drop the same sample coin through that you do want to accept 6 times.** Now turn back to "0" the operating position.

COIN DE-LEARN PROCEDURE

1. Slide the front cover up and turn the rotary switch to the coin # position you wish to DE-LEARN.
2. Push the black or red button once to initiate the LEARN sequence.
3. Turn the rotary switch back to position #0 without depositing any coins to signal the unit that you wish it to erase the parameters for this coin. The LED will flash red-green to indicate completion.
4. Slide the front cover back down.

FIELD TESTS & DIAGNOSTICS FOR MA800/MA803/X10/X10CM (NOT MA812'S)

Normal operation in switch position #0 is shown by a green LED. If the LED is flashing yellow or alternately red-green, it indicates a malfunction has been detected. Some malfunctions can be corrected in the field. See below.

GATE RELAY TEST (rotary switch #0)

Press the black or red button to activate the gate relay. If not normal, it may be physically obstructed or its wire unplugged.

INDUCTIVE METAL SENSOR TESTS (rotary switch #E, #F)

Turn the rotary switch to positions #E and #F to test the inductive sensor. Normal LED color is green. A red color indicates either there is metal in front of the inductive sensors or the circuit is malfunctioning(usually the rear flat cable unplugged).

DIAMETER OPTICS SENSOR TESTS (rotary switch #B, #C, #D)

Turn the rotary switch to positions #B, #C, and #D to test the diameter thru-beam optical sensors. Normal LED color is green. A red or orange color indicated either there is an object or dirt blocking one of these three sensors and cleaning of the coin cute is required, or the circuit is malfunctioning.

X-MARK® CODE OPTICS SENSOR CALIBRATION (rotary switch #9, #A for Model X-10 only)

Fold a piece of white paper twice (to 4 thicknesses) and insert it into the center of the coin chute. Turn the rotary switch to position #9 (rear side optics)and press the black or red button. The unit will use information gathered to calibrate the sensitivity of its reflective sensors for reading the X-Mark® optical code on tokens. The LED should be an orange color after calibration. Repeat for switch position #A (front side optics).

CREDIT SENSOR TEST (rotary switch #8)

Turn the rotary switch to position #8 to test the Credit Sensors (V2.0 chip and after). If not installed the LED will blink yellow, if installed and in good order it will be green, if installed and dirty or blocked, orange to red color.

MEMORY TEST (rotary switch #7)

Turn the rotary switch to positions #7 to test the validity of memory. Normal LED color is green. A red color indicates that memory is corrupted. It may be possible to correct this by re-learning the coins. If not, the memory chip is bad.

Mailing: 401 W. Main St., El Dorado AR 71730 -Shipping 400 W. Cedar St., El Dorado AR 71730
☎ 800-643-1109, 870-862-2051 , FAX 870-862-3472 e-mail: sales@idxinc.com, web site: www.idxinc.com

WIRING INFORMATION – MA800-MA812-X10
FOR MA803 AND X10DM CHECK WITH FACTORY

XEPTOR® CONNECTIONS TO DISPLAYS & TIMERS

LTT800 / LTT802 CONNECTIONS

MA800 or X10	LTT802
YELLOW	PIN #1
BLACK	PIN #2
RED/GREEN	PIN #3
RED/GREEN	PIN #2

BT800/BT802/BT902/BT912/ BT922-CONNECTIONS

MA800 or X10	BT800-BT922
YELLOW	PIN #1
BLACK	PIN #2
RED/GREEN	PIN #3
RED/GREEN	PIN #2

MONORAIL DISPLAY CONNECTIONS

MA800 or X10	MDC
YELLOW	BLK-24V
BLACK	WH-COM
RED/GREEN	WH/GRN
RED/GREEN	WH-COM

DIXMOR LED 3 CONNECTIONS

MA800 or X10	LED 3
YELLOW	#7 RED
BLACK	#6 GREEN
RED/GREEN	#2 BROWN
RED/GREEN	#1 GRAY/#6 GREEN

DIXMOR DX2000 CONNECTIONS

MA800 or X10	DX2000
YELLOW	#9
BLACK	#10
RED/GREEN	#10
RED/GREEN	#5

DIXMOR DX300 CONNECTIONS

MA800 or X10	DX300
YELLOW	#7
BLACK	#6
RED/GREEN	#6
RED/GREEN	#1

TIME MASTER TM5/TM5J/LED5/CT2000 CONNECTIONS

MA800 or X10	TIME MASTER
YELLOW	#9 ORANGE
BLACK	#10 GREEN
RED/GREEN	#10 GREEN
RED/GREEN	#2 ORANGE/BLK

XEPTOR® CONNECTIONS TO DISPLAYS & TIMERS

D & S DISPLAY TIMER CONNECTIONS

MA800 or X10	202/203/204
YELLOW	BLK/YEL#7
BLACK	WHITE #6
RED/GREEN	BLUE #2
RED/GREEN	WHITE #6

GINSAN DISPLAY CONNECTIONS

MA800 or X10	GS31/GS31B
YELLOW	RED
BLACK	PURPLE
RED/GREEN	RED/GRN
RED/GREEN	PURPLE

CALL FOR TIMER CONNECTIONS

DILLING & HARRIS CONNECTIONS

MA800 or X10	
YELLOW	
BLACK	
RED/GREEN	
RED/GREEN	

SPECIALTY MFG CONNECTIONS

MA800 or X10	TIME MACHINE
YELLOW	BLK-24V
BLACK	WHT-COM
RED/GREEN	BLK-24V
RED/GREEN	YEL- COIN SWITCH

SECURECOIN TIMER 24 VOLT CONNECTIONS

MA800 or X10	#ET SAME AS IDX AT411
YELLOW	#2
BLACK	#3
RED/GREEN	#7
RED/GREEN	# 8 or #3

D & S CONNECTIONS

MA800 or X10	NON- DISPLAY
YELLOW	24V HOT (L1)
BLACK	24V COMMON (L2)
RED/GRN	COIN
RED/GRN	24V COMMON (L2)

MAGIC WAND & JIM COLMEN TM5/TM5J/ CT2000 CONNECTIONS

MA800 or X10	TIME MASTER
YELLOW	#9 ORANGE
BLACK	#10 GREEN
RED/GREEN	#10 GREEN
RED/GREEN	#2 ORANGE/BLK

XEPTOR® CONNECTIONS TO DISPLAYS & TIMERS

IDX FLAT PACK 24 VAC CONNECTIONS

MA800 or X10	AT411/AT422 AT412
YELLOW	PIN #2
BLACK	PIN #3
RED/GREEN	PIN #7
RED/GREEN	PIN #8 or #3

IDX FLAT PACK 115 VAC CONNECTIONS

MA800 or X10	AT413
115V HOT	PIN #1
115V COMMON	PIN #3
YELLOW	PIN #2
BLACK	PIN #8 or #3
RED/GREEN	PIN #7
RED/GREEN	PIN #8 or #3

IDX PLUG IN TIMERS 24 VOLT CONNECTIONS

MA800 or X10	AT401/402/403
YELLOW	#2
BLACK	#1
RED/GREEN	#3
RED/GREEN	#1

MONORAIL PLUG IN TIMER 24 VOLT CONNECTIONS

MA800 or X10	FOR G2
YELLOW	#2
BLACK	#1
RED/GREEN	#3
RED/GREEN	#1

MONORAIL TIMER 24 VOLT CONNECTIONS

MA800 or X10	MDC
YELLOW	BLK-24V
BLACK	WH-COM
RED/GREEN	WH/GRN
RED/GREEN	WH-COM

PARAPLATE CONNECTIONS

MA800 or X10	T24120
YELLOW	#2
BLACK	#3
RED/GREEN	#7
RED/GREEN	#8 or #3

PARAPLATE -NEW 24VAC CONNECTIONS

MA800 or X10	T24200
YELLOW	#1
BLACK	#2
RED/GREEN	#5
RED/GREEN	#6 or #2

XEPTOR® CONNECTIONS TO DISPLAYS & TIMERS

GINSAN 24 VOLT CONNECTIONS

MA800 or X10	GS-7/8/75 GS-87/255
YELLOW	#3
BLACK	#1
RED/GREEN	#4
RED/GREEN	#1
TOKEN INPUT	#5 (GS87)

GINSAN GS9 115 VOLT CONNECTIONS

MA800 or X10	GS-9
YELLOW	#7
BLACK	#5
RED/GREEN	#4
RED/GREEN	#5

GINSAN GS11 115 VOLT CONNECTIONS

MA800 or X10	GS-11
YELLOW	#1
BLACK	#4
RED/GREEN	#3
RED/GREEN	#4

KELTNER CONNECTIONS

MA800 or X10	D9
YELLOW	#1
BLACK	#2
RED/GREEN	#4
RED/GREEN	# 5 or #2

KELTNER CONNECTIONS

MA800 or X10	LC-1
YELLOW	#2
BLACK	#1
RED/GREEN	#4
RED/GREEN	# 3 or #1

PARKER CONNECTIONS

MA800 or X10	
YELLOW	#3
BLACK	#1
RED/GREEN	#4
RED/GREEN	#1

MARK VII CONNECTIONS

MA800 or X10	ACCUTIME
YELLOW	#2
BLACK	#1
RED/GREEN	#4
RED/GREEN	#1

9. PARTS LIST

ITEM	PART #	DESCRIPTION
1	93111	Poly Vacuum Dome (oval)
2	MD004-1	Oval Regular Vac Meter Door
	MD004-2	" (w/keypad only)
	MD004-3	" (w/keypad and bill acceptor)
	MD004-4	" (w/bill acceptor only)
3		Coin Acceptor Slot
4	24450	Test Key Switch XX7906
5		Coin Return Slot/Cup
6	VAC019	Oval Dirt Door
	VAC009-1	Round Dirt Door (w/hinge)
7	VB037-1, VB037-2	SS Body (w/fragrance)
	VB037-3, VB037-4	SS Body (plain)
8	24512	R26001 Double Pos Lock (w/o bill acceptor)
	24511	R26001 Single Pos Lock (w/o bill acceptor)
	24074	Medico Cam Lock, Dbbl Key Pull (w/bill acceptor)
9	82017	Timer 1034S (with Swipe-N-Clean)
	82017-N	Timer 1034R (without Swipe-N-Clean)

Parts list cont.

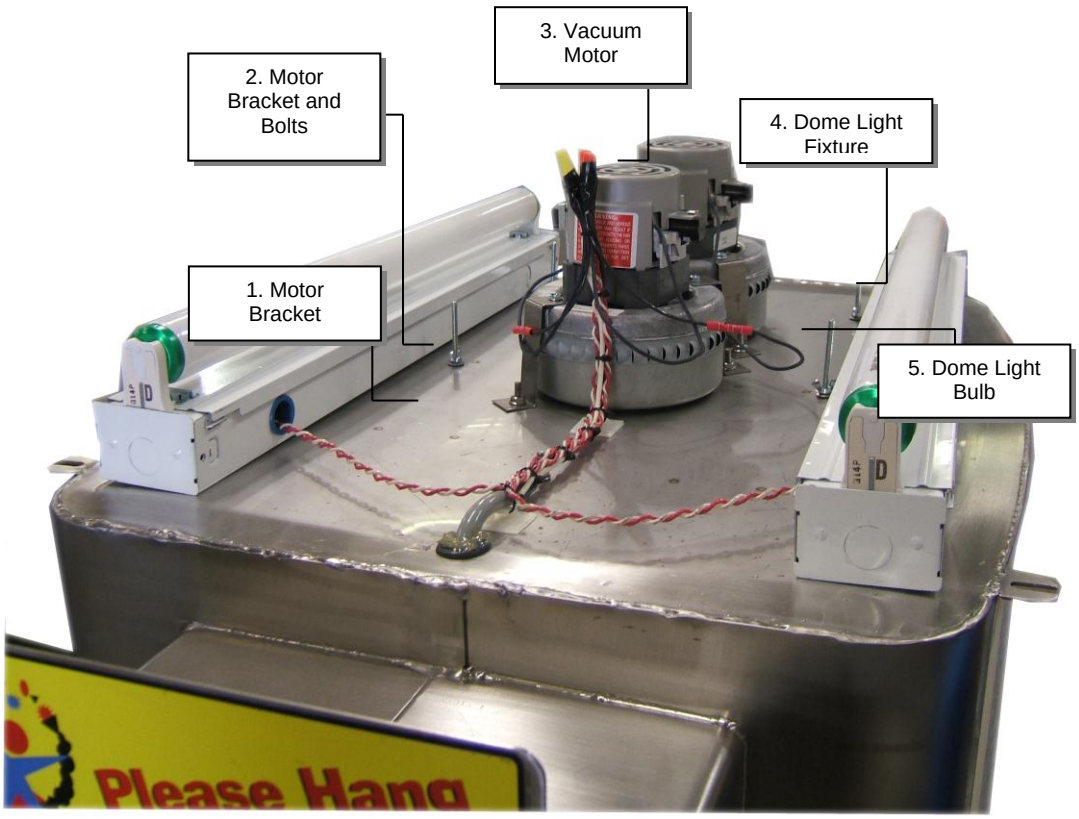

ITEM	PART #	DESCRIPTION
1	93220	Motor Bracket
2	92168	Motor Bracket and Bolts
	93225	Motor Bracket Screws
3	55114	Vacuum Motor 1.6hp 110v
4	42000	Vacuum Dome Light Fixture
5	42004	Vacuum Dome Light Fixture Bulb

Parts list cont.

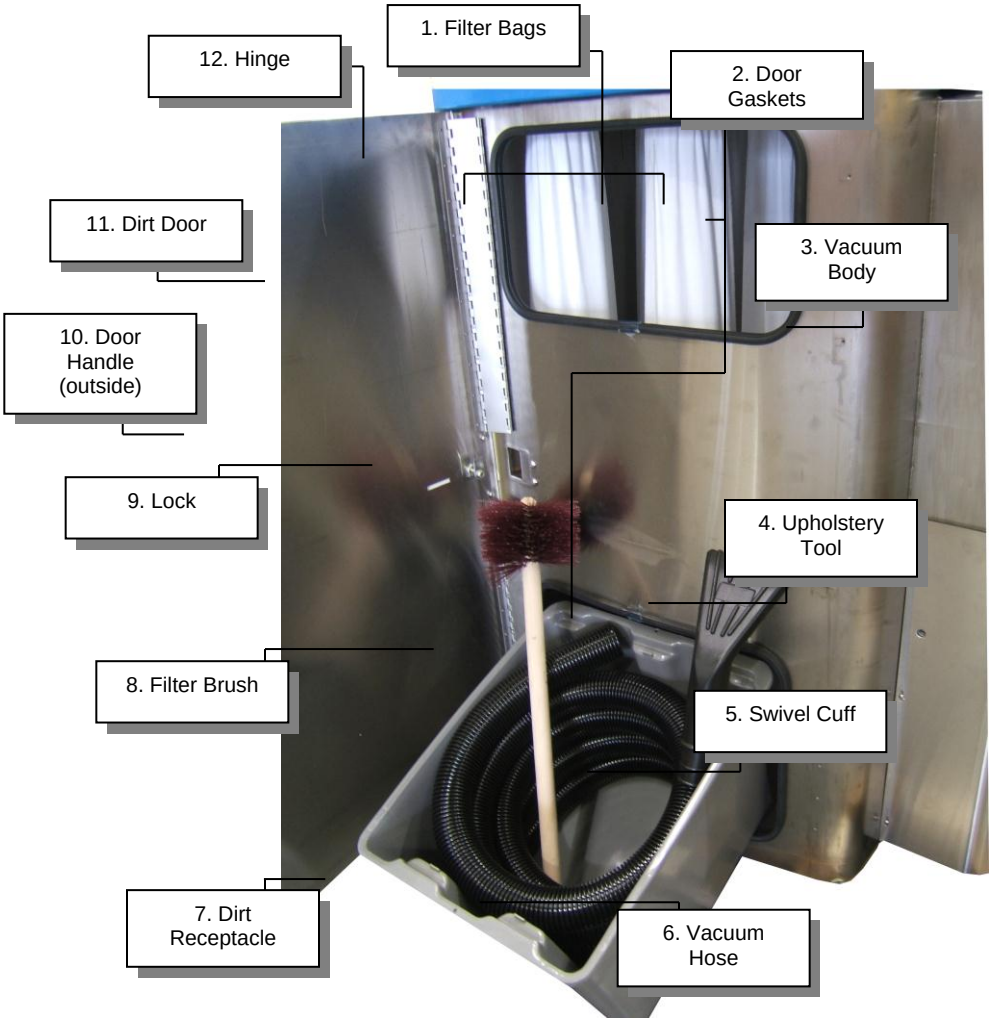

ITEM	PART #	DESCRIPTION
1	93245	Filter Bag
2	93121	Door Gasket
3	VB037-1, VB037-2	Vacuum Body (with fragrance)
	VB037-3, VB037-4	Vacuum Body (plain)
4	92229	Upholstery Tool
5	92214	Draco Swivel Cuff
6	92202	Vacuum Hose
7	93155	Dirt Receptacle
8	93245-1	Filter Brush
9	24385	Lock
10	C004	Door Handle
11	VAC019	Door
12	XCOL-38	Hinge

Parts list cont.

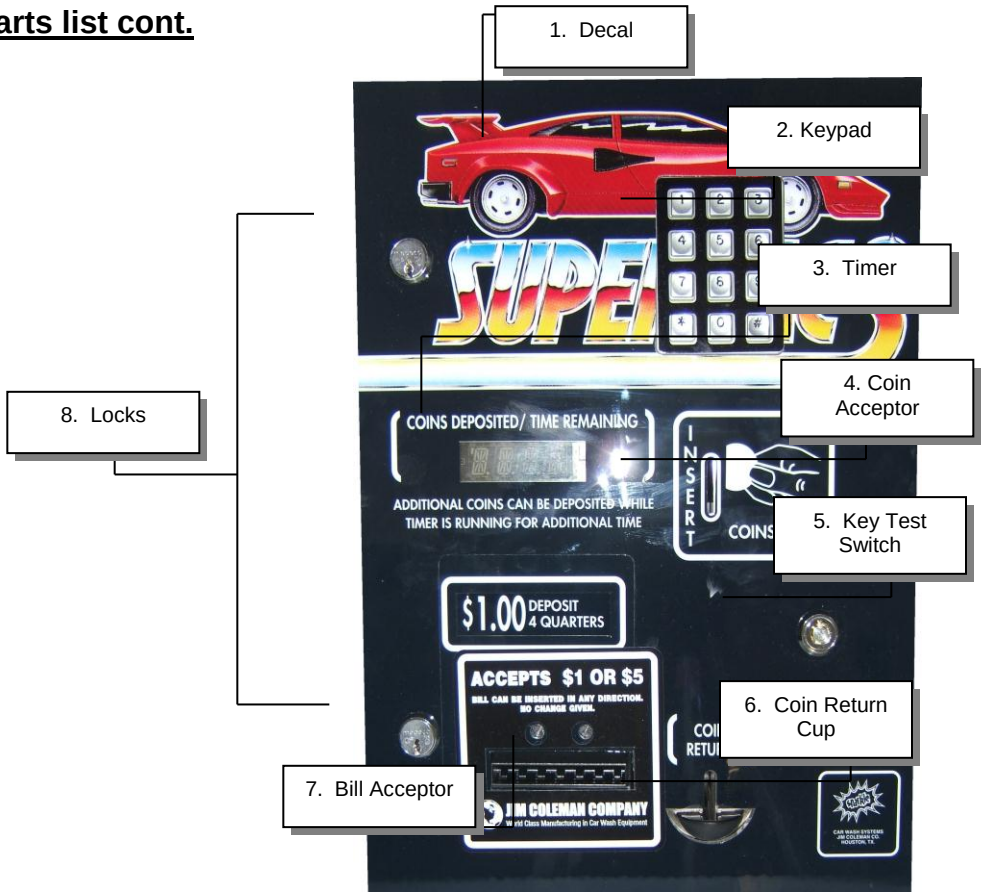

Parts list cont.

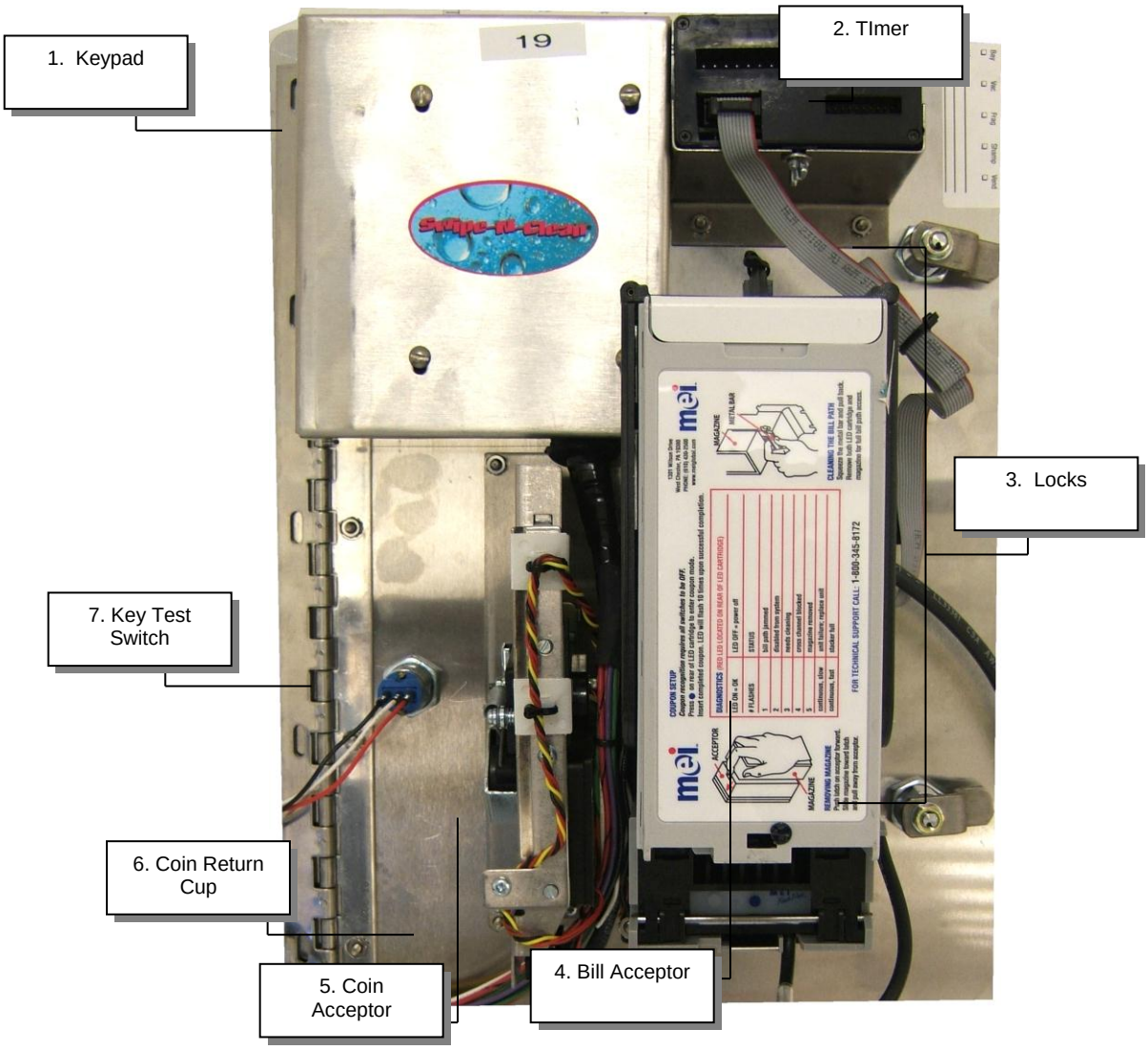

ITEM	PART #	DESCRIPTION
1	72005	12 Pos Keypad (optional)
2	82017-N	Timer-1034R (w/o Swipe-N-Clean)
	82017	Timer-1034S (w/ Swipe-N-Clean)
3	24512	R26001 Double Pos Lock (w/o bill acceptor)
	24511	R26001 Single Pos Lock (w/o bill acceptor)
	24074	Medico Cam Lock, Dbbl Key Pull (as shown above) (w/bill acceptor)
4	16098	Bill Acceptor (optional)
5	69-26242	Coin Acceptor
6	26022	Coin Return Cup
7	24450	Key Test Switch

Parts list cont.

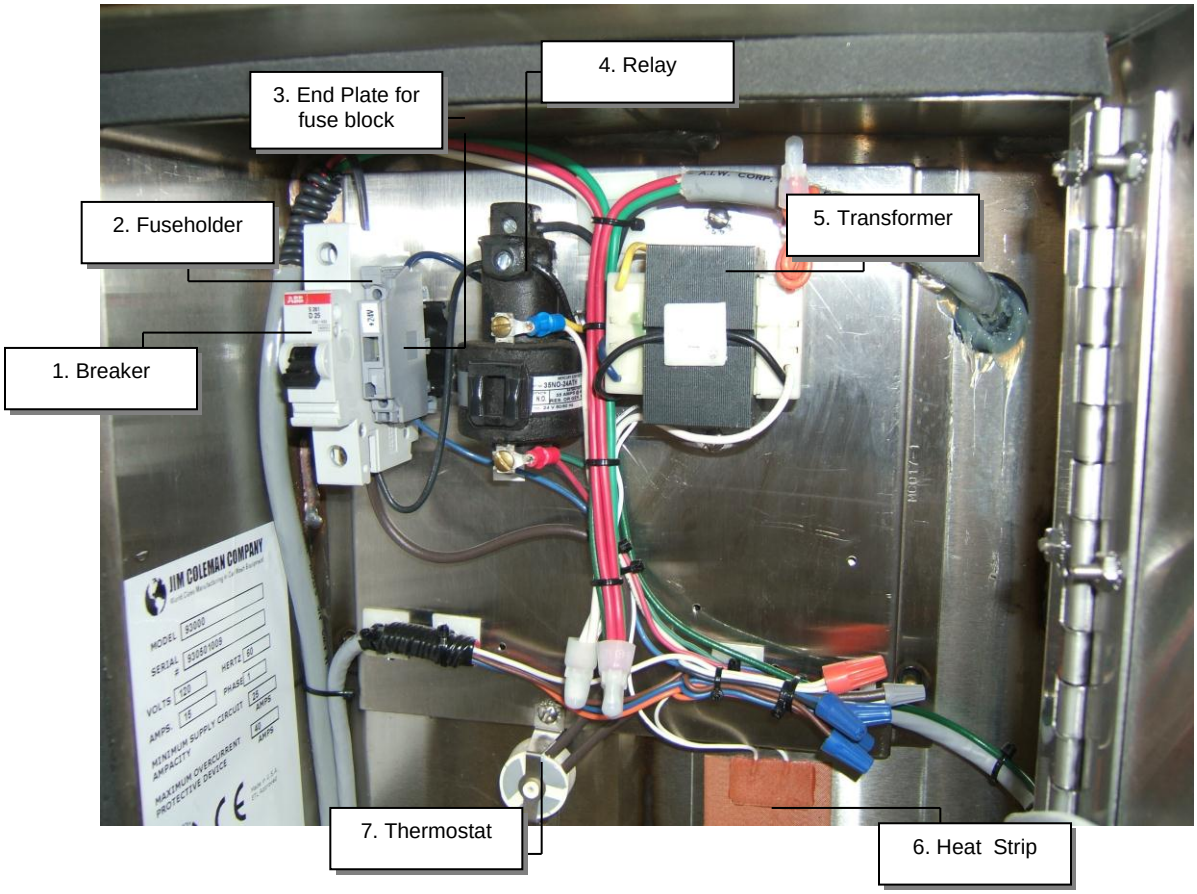

ITEM	PART #	DESCRIPTION
1	40023	Circuit Breaker, 25amp white
2	40340-2	Fuseholder
3	40500	End Plate for Fuse Block
4	60012	Mercury Relay 24volt
5	82062	Transformer, 120p/24s/40va
6	24093	Heat Strip-S, Vac3 120/240v-25w
7	68120	Thermostat-Frag/Sham small

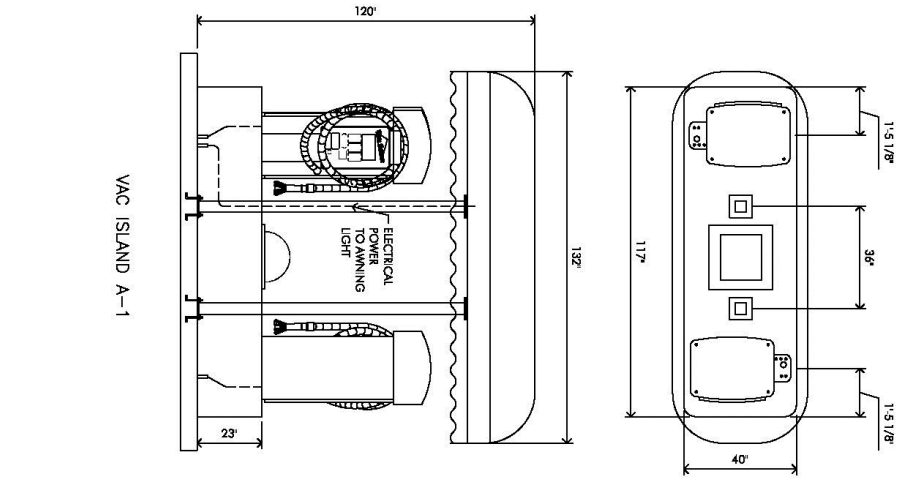

VAC ISLAND A-1

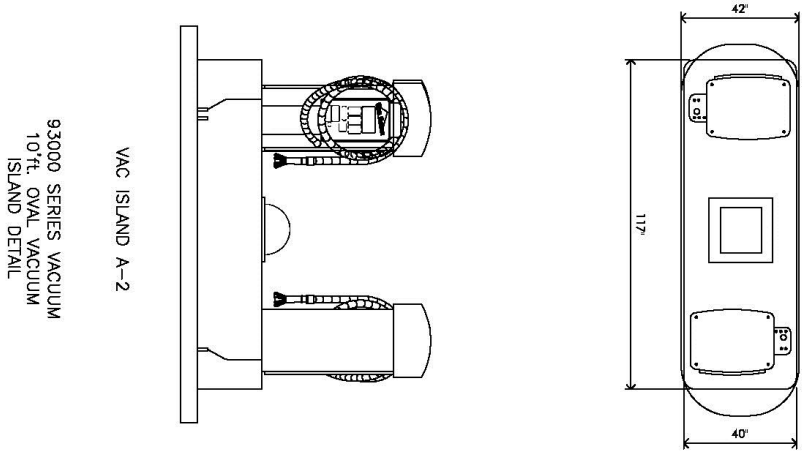

VAC ISLAND A-2

93000 SERIES VACUUM
10'ft. OVAL VACUUM
ISLAND DETAIL

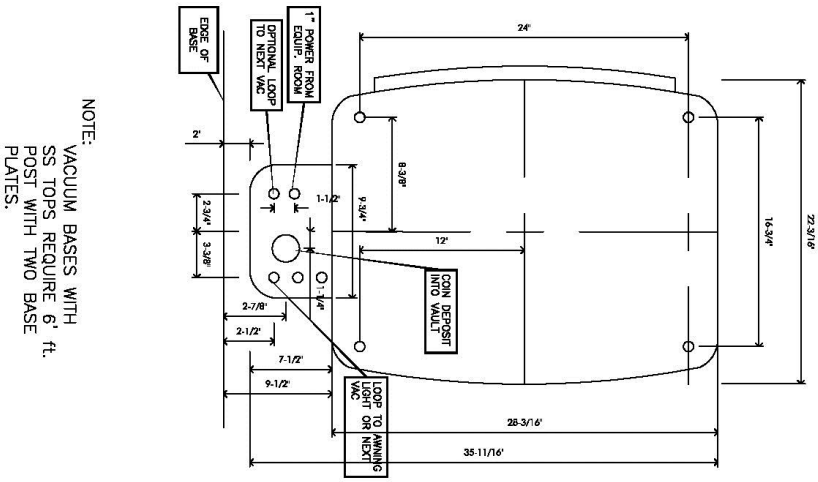

NOTE:
VACUUM BASES WITH SS TOPS REQUIRE 6' ft. POST WITH TWO BASE PLATES.

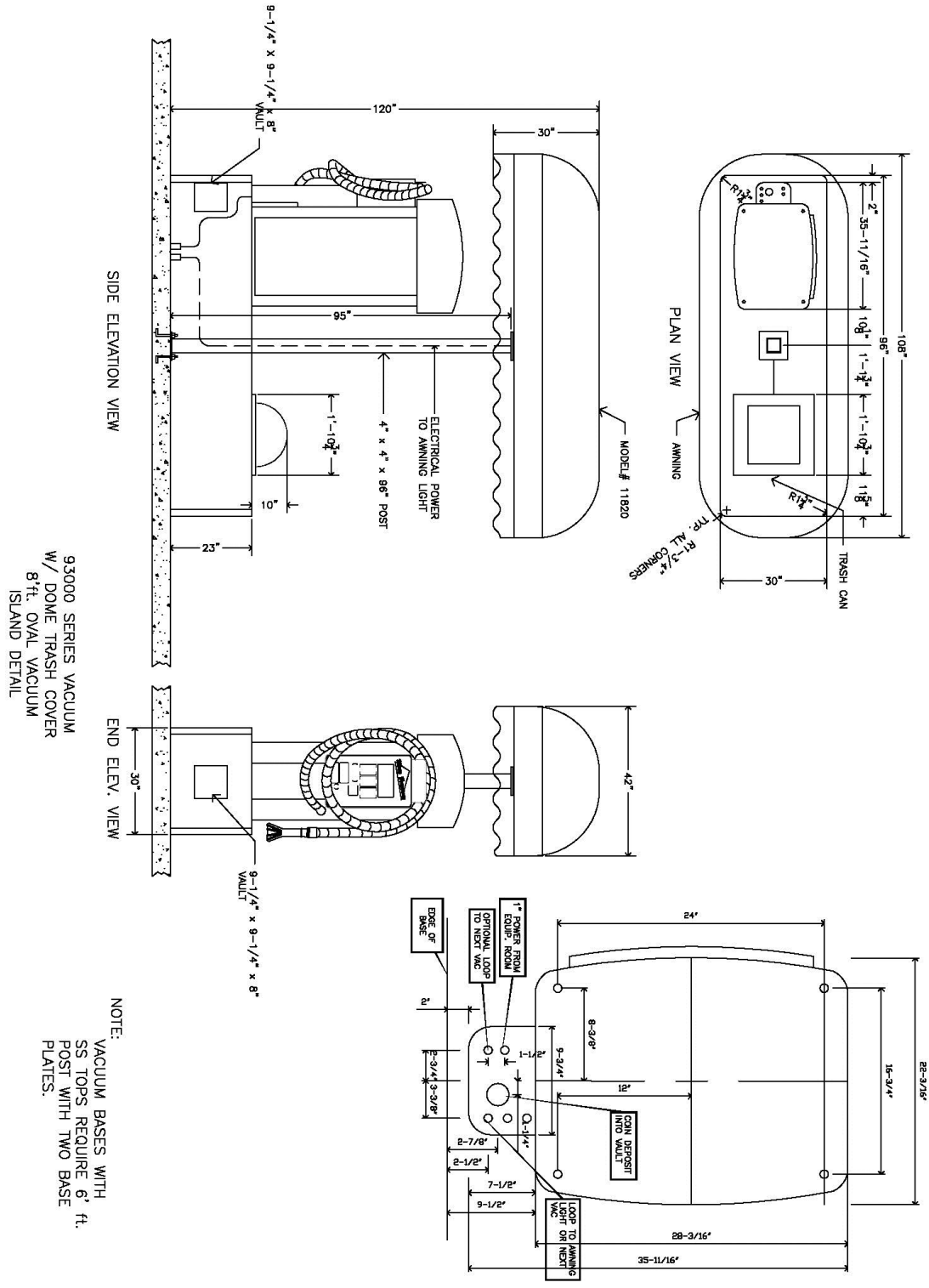

93000 SERIES VACUUM
W/ DOME TRASH COVER
8'ft. OVAL VACUUM
ISLAND DETAIL

NOTE:
VACUUM BASES WITH SS TOPS REQUIRE 6' ft. POST WITH TWO BASE PLATES.

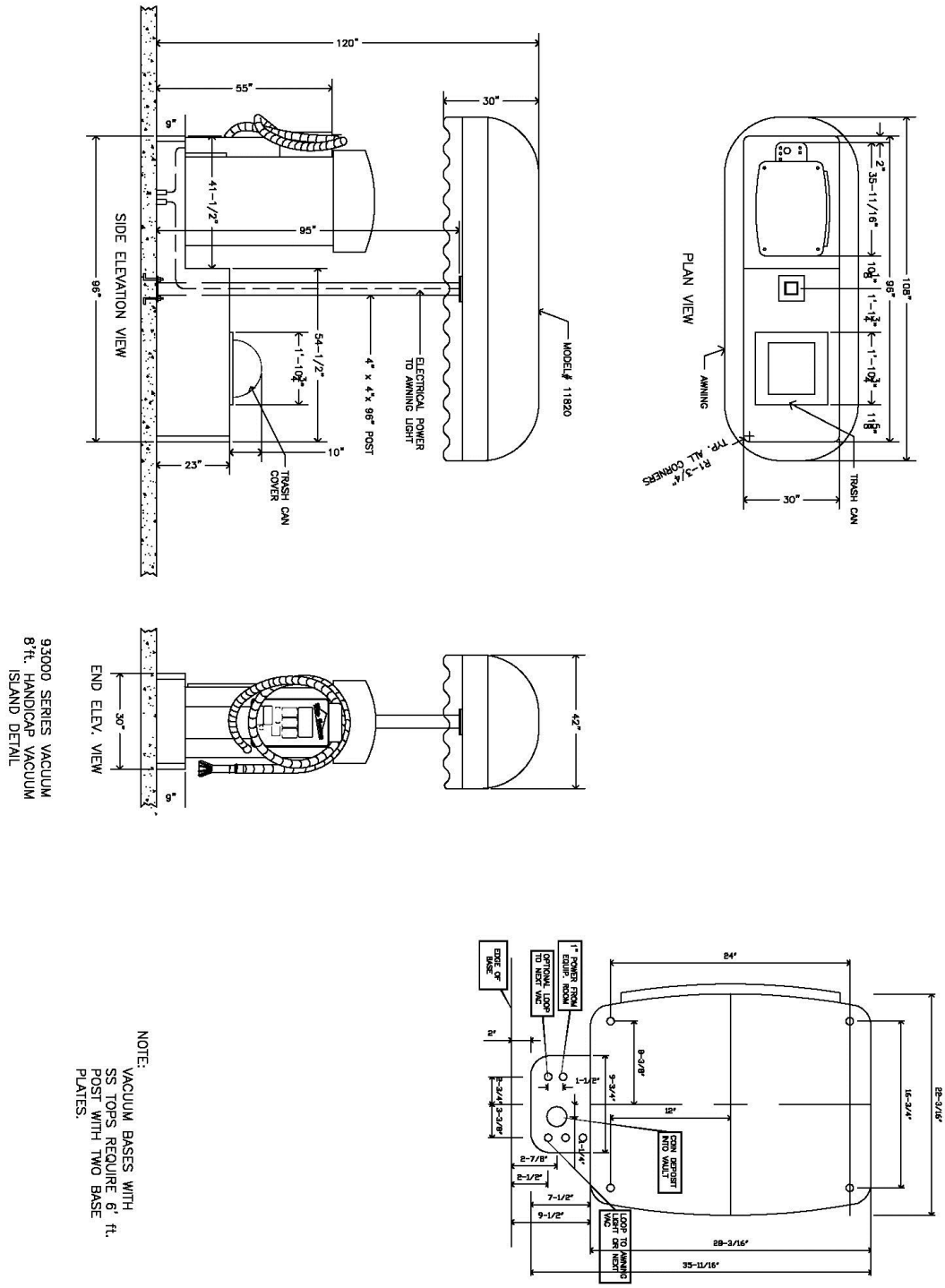
SIDE ELEVATION VIEW
PLAN VIEW
END ELEV. VIEW
93000 SERIES VACUUM
8'ft. HANDICAP VACUUM
ISLAND DETAIL
MODEL# 11820
ELECTRICAL POWER TO AWNING LIGHT
4" x 4" x 96" POST
TRASH CAN COVER
AWNING
TYP. ALL CORNERS
TRASH CAN
EDGE OF BASE
OPTIONAL LOOP TO NEXT VAC
1" POWER FROM EQUIP. ROOM
COIN DEPOSIT INTO VAULT
LOOP TO AWNING LIGHT OR NEXT VAC
NOTE:
VACUUM BASES WITH
SS TOPS REQUIRE 6' ft.
POST WITH TWO BASE
PLATES.

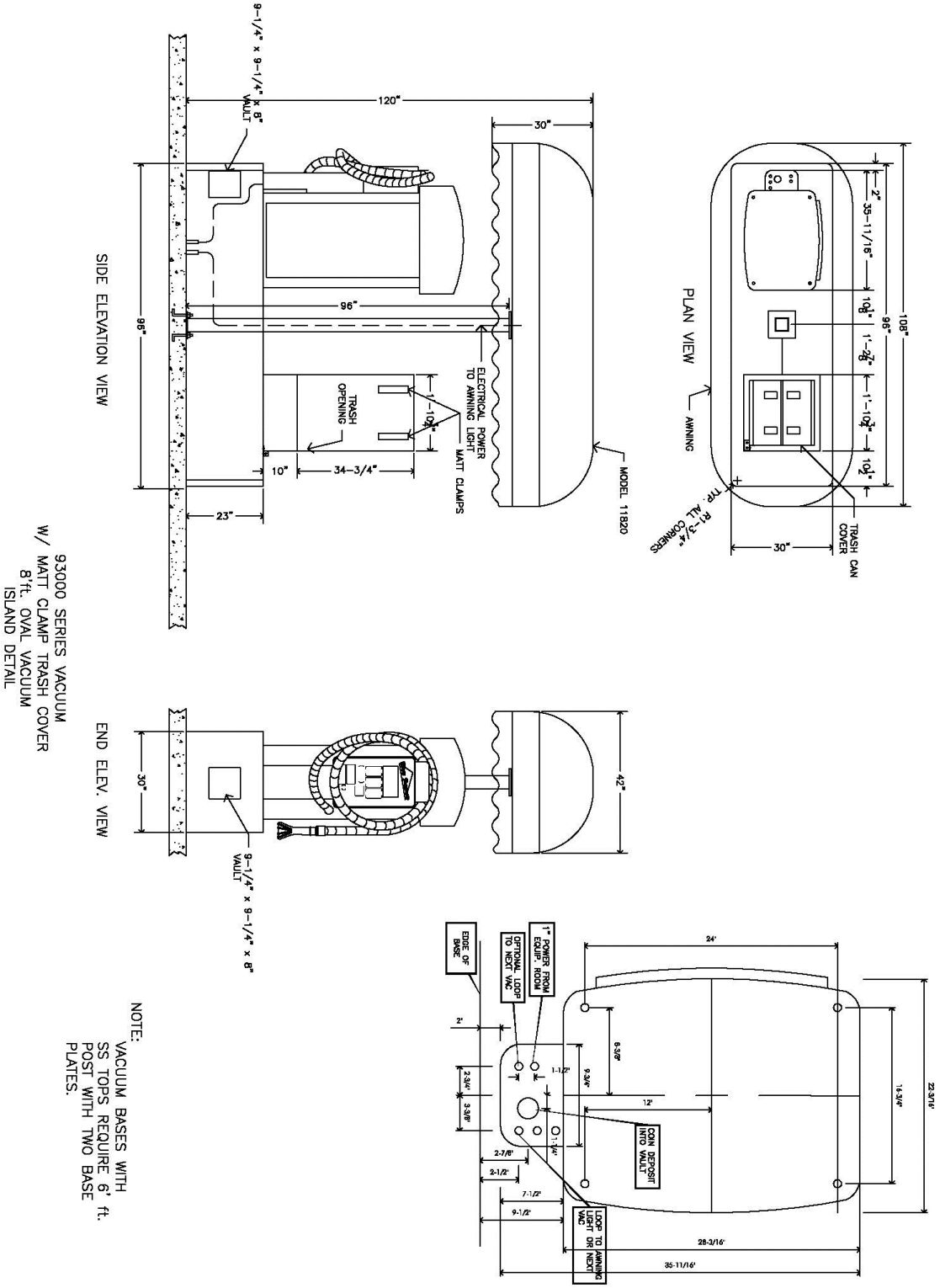

93000 SERIES VACUUM
W/ MATT CLAMP TRASH COVER
8'ft. OVAL VACUUM
ISLAND DETAIL

NOTE:
VACUUM BASES WITH SS TOPS REQUIRE 6' ft. POST WITH TWO BASE PLATES.

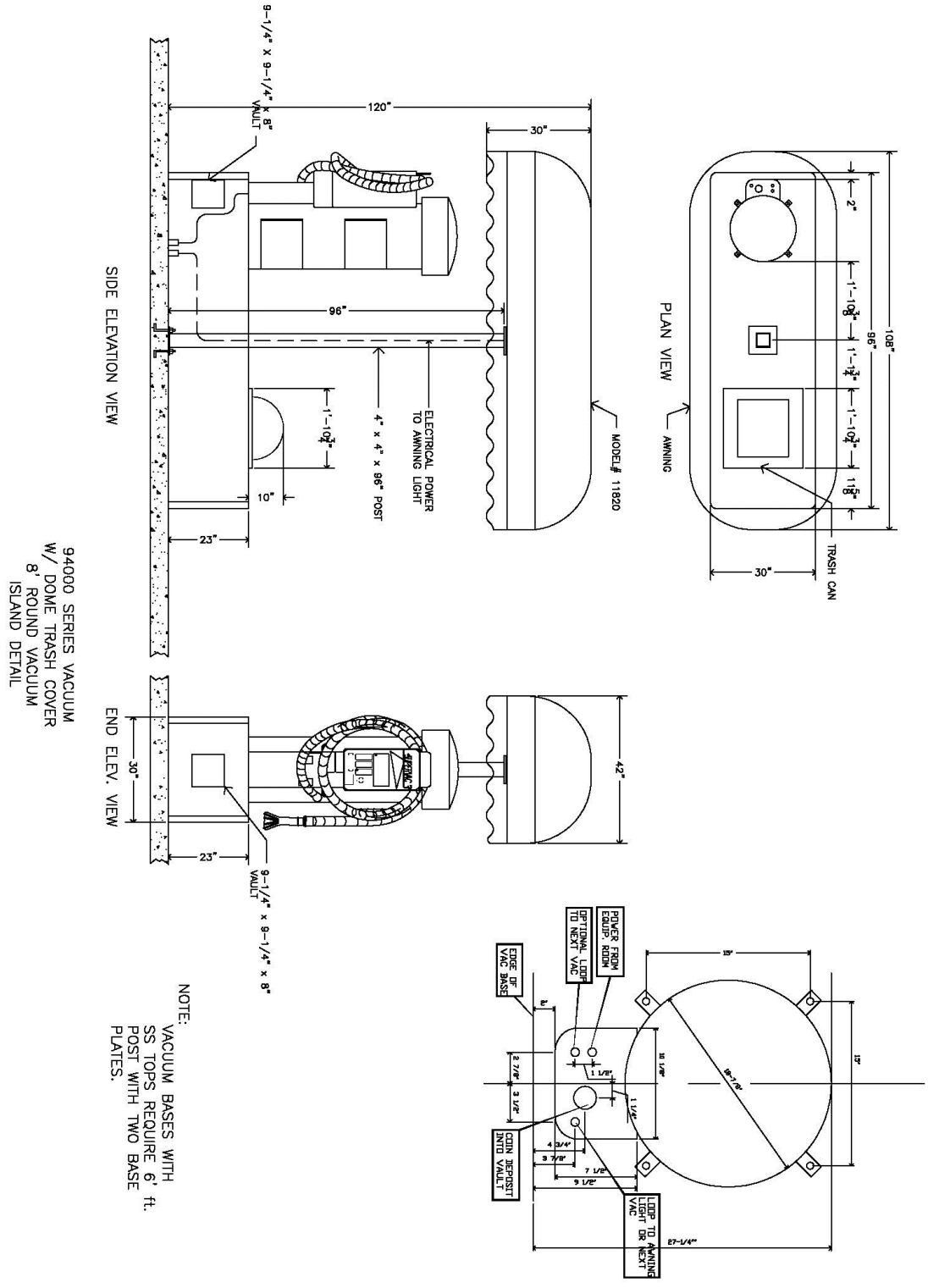
SIDE ELEVATION VIEW
END ELEV. VIEW
PLAN VIEW
9-1/4" X 9-1/4" X 8" VAULT
120"
30"
96"
108"
2"
1'-10 3/8"
1'-1 3/4"
1'-10 3/4"
11 5/8"
AWNING
TRASH CAN
MODEL# 11820
ELECTRICAL POWER TO AWNING LIGHT
4" x 4" x 96" POST
1'-10 3/4"
10"
23"
42"
94000 SERIES VACUUM
W/ DOME TRASH COVER
8' ROUND VACUUM
ISLAND DETAIL
NOTE:
VACUUM BASES WITH
SS TOPS REQUIRE 6' ft.
POST WITH TWO BASE
PLATES.
POWER FROM EQUIP. ROOM
OPTIONAL LOOP TO NEXT VAC
EDGE OF VAC BASE
COIN DEPOSIT INTO VAULT
LOOP TO AWNING LIGHT OR NEXT VAC
15"
27-1/4"

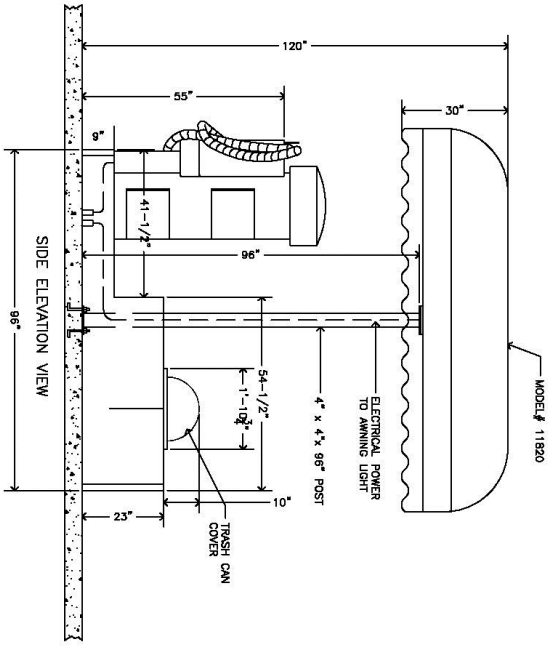

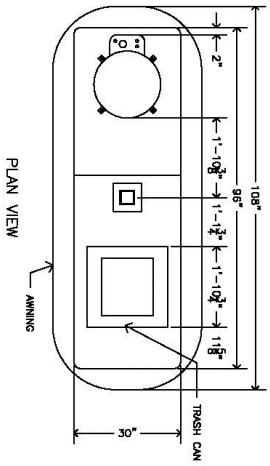

94000 SERIES VACUUM
8' HANDICAP ROUND
VACUUM ISLAND DETAIL

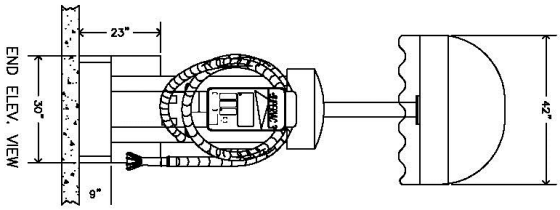

NOTE:
VACUUM BASES WITH SS TOPS REQUIRE 6' ft. POST WITH TWO BASE PLATES.

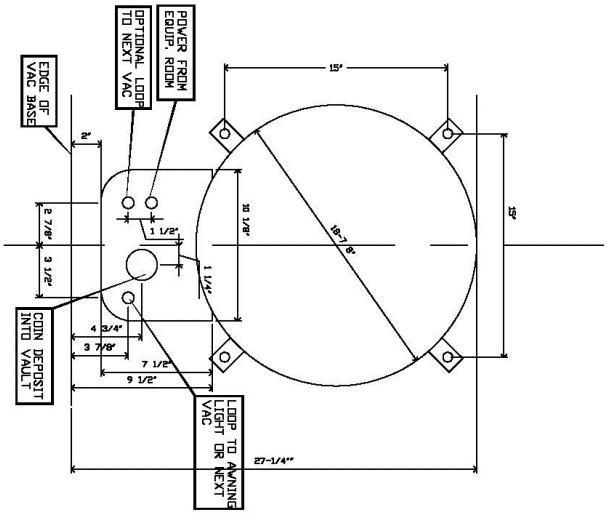

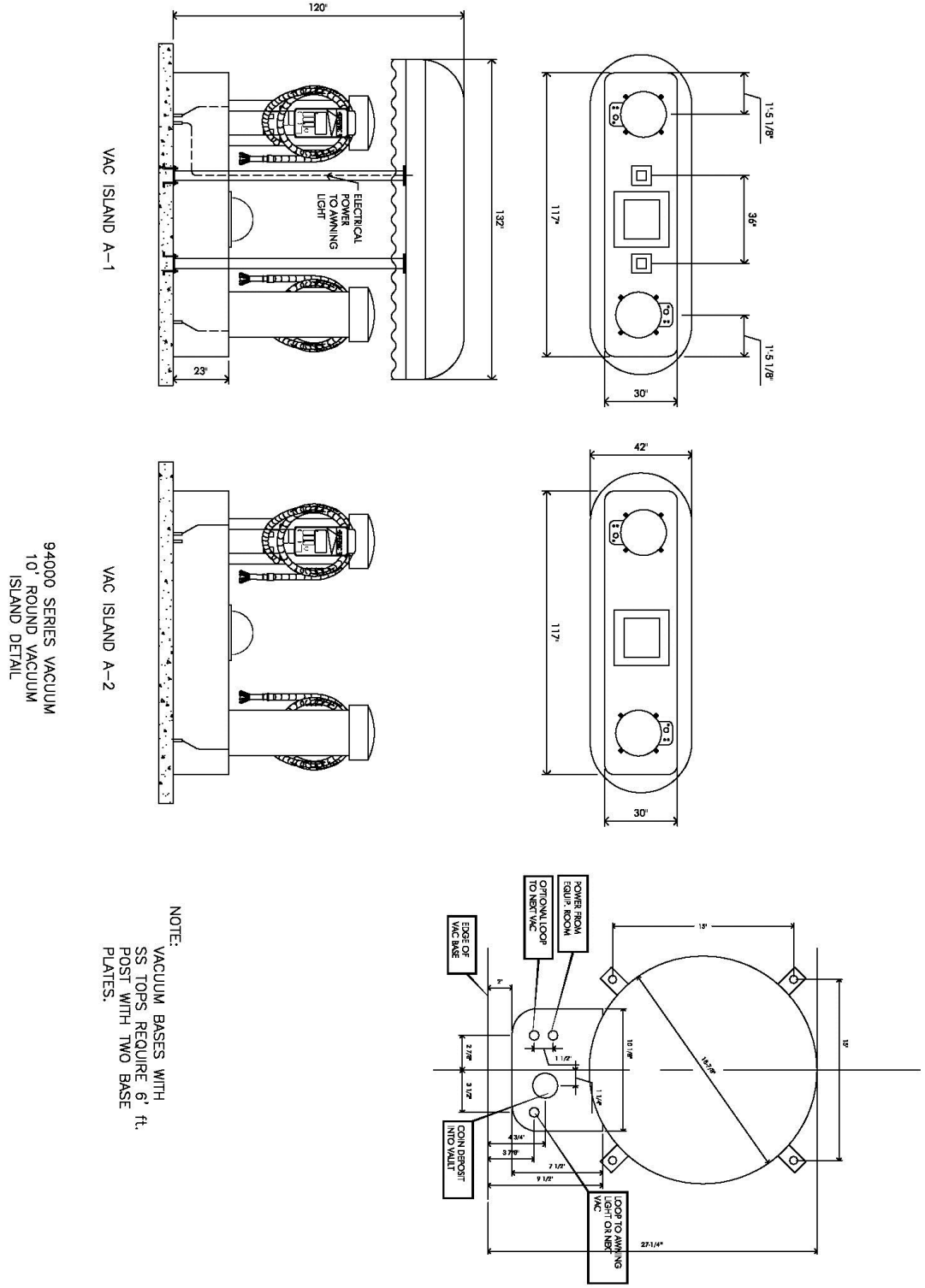
VAC ISLAND A-1
120"
132"
23"
ELECTRICAL POWER TO AWNING LIGHT
117"
36"
1'-5 1/8"
1'-5 1/8"
30"
VAC ISLAND A-2
42"
117"
30"
94000 SERIES VACUUM
10' ROUND VACUUM
ISLAND DETAIL
NOTE:
VACUUM BASES WITH SS TOPS REQUIRE 6' ft. POST WITH TWO BASE PLATES.
EDGE OF VAC BASE
OPTIONAL LOOP TO NEXT VAC
POWER FROM EQUIP. ROOM
COIN DEPOSIT INTO VAULT
LOOP TO AWNING LIGHT OR NEXT VAC
15"
19"
27-1/4"

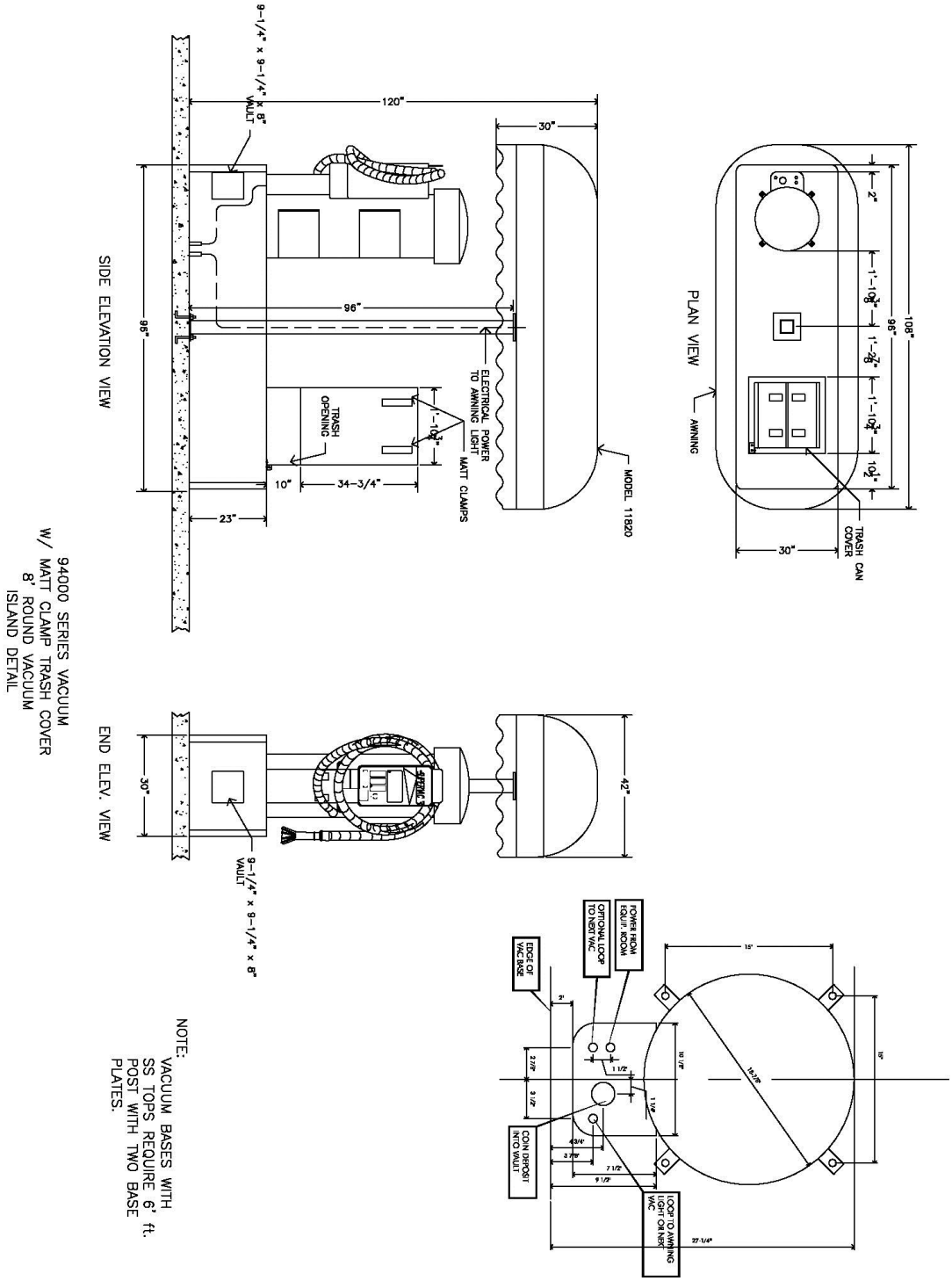

NOTE:
VACUUM BASES WITH SS TOPS REQUIRE 6' ft. POST WITH TWO BASE PLATES.

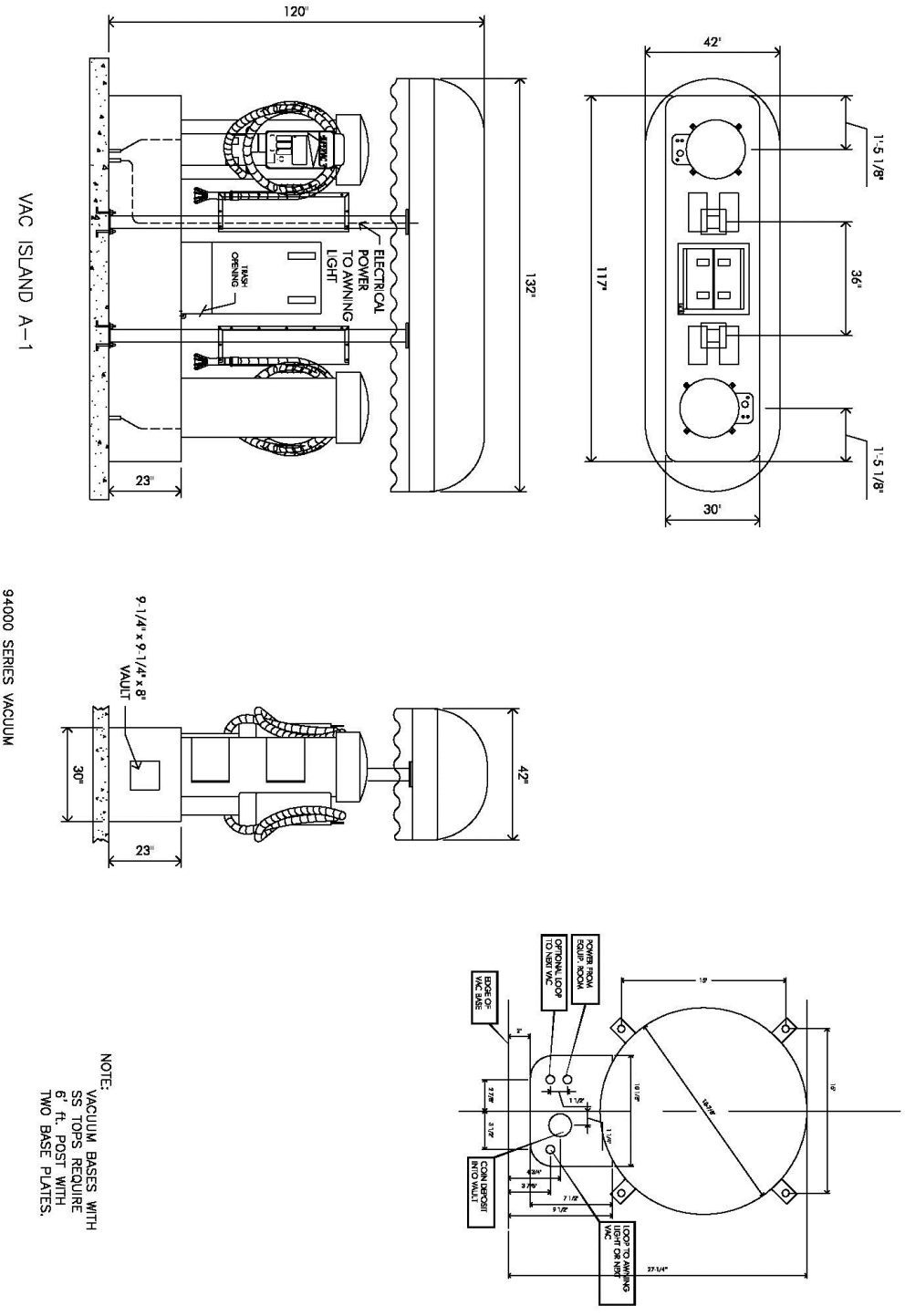
120"
132"
23"
ELECTRICAL POWER TO AWNING LIGHT
TRASH OPENING
42"
117"
36"
1'-5 1/8"
1'-5 1/8"
30"
VAC ISLAND A-1
9-1/4" x 9-1/4" x 8" VAULT
30"
23"
42"
94000 SERIES VACUUM W/ MATT CLAMP TRASH COVER 10' ROUND VACUUM ISLAND DETAIL
POWER FROM EQUIP. ROOM
OPTIONAL LOOP TO NEXT VAC
EDGE OF VAC BASE
COIN DEPOSIT INTO VAULT
LOOP TO AWNING LIGHT OR NEXT VAC
27-1/4"
NOTE:
VACUUM BASES WITH SS TOPS REQUIRE 6' ft. POST WITH TWO BASE PLATES.